Installation Instructions

Gas Conversion Kit Natural-to-Propane
For All Condensing Furnaces, 2 Stage 80%
Variable Speed Furnaces, 2-Stage Non-Condensing
Furnaces and Fixed Capacity 80% Furnaces

KGANP2901ALL

NOTE: Read the entire instruction manual before starting the installation.
This symbol → indicates a change since the last issue.

SAFETY CONSIDERATIONS

Installing and servicing heating equipment can be hazardous due to gas and electrical components. Only trained and qualified personnel should install, repair, or service heating equipment.

Untrained personnel can perform basic maintenance functions such as cleaning and replacing air filters. Trained service personnel must perform all other operations. When working on heating equipment, observe precautions in the literature, on tags, and on labels attached to or shipped with the unit, and other safety precautions that may apply.

Follow all safety codes. In the United States, follow all safety codes including the National Fuel Gas Code (NFGC) NFPA No. 54-1999/ANSI Z223.1-1999. In Canada, refer to the National Standard of Canada, Natural Gas and Propane Installation Codes (NSCNGPIC), CAN/CGA-B149.1 and .2-M00.

Wear safety glasses and work gloves. Have a fire extinguisher available during start-up, adjustment Steps, and service calls.

Recognize safety information. This is the safety-alert symbol. ⚠ When you see this symbol on the furnace and in instructions or manuals, be alert to the potential for personal injury.

Understand the signal words **DANGER**, **WARNING**, **CAUTION**, and **NOTE**. The words DANGER, WARNING, and CAUTION are used with the safety-alert symbol. DANGER identifies the most serious hazards, which **will** result in severe personal injury or death. WARNING signifies hazards, which **could** result in personal injury or death. CAUTION is used to identify unsafe practices, which **would** result in minor personal injury, or product and property damage. NOTE is used to highlight suggestions, which **will** result in enhanced installation, reliability, or operation.

⚠ **WARNING: This conversion kit shall be installed by a qualified service agency in accordance with the manufacturer's instructions and all applicable codes and requirements of the authority having jurisdiction. If the information in these instructions is not followed exactly, a fire, explosion, or production of carbon monoxide may result causing property damage, personal injury, or loss of life. The qualified service agency is responsible for the proper installation of this furnace with this kit. The installation is not proper and complete until the operation of the converted appliance is checked as specified in the manufacturer's instructions supplied with the kit.**

⚠ **AVERTISSEMENT: Cette trousse de conversion ne doit être installée que par le représentant d'un organisme qualifié et conformément aux instructions du fabricant et à tous les codes et exigences pertinents de l'autorité compétente. Les instructions du présent guide doivent être suivies afin de réduire au minimum au risque d'incendie ou d'explosion de dommange matériels, de blessure ou de mort. L'organisme qualifié responsable de l'installation adéquate de cette trousse. L'installation n'est pas adéquate ni complète tant que le bon fonctionnement de l'appereil converti n'a pas été vérfié selon les instructions du fabricant fornies avec la trousse.**

INTRODUCTION

This instruction covers the installation of gas conversion kit Part No. KGANP2901ALL to convert the following furnaces from natural gas usage to propane gas usage. See appropriate section for your furnace type.

→• Section 1— (Page 3) Models 58STA, 58STX, 58DLA, 58DLX, 310AAV, 310JAV, 311AAV, 311JAV, PG8MAA, PG8JAA, 58CTA, 58CTX, 58CVA, 58CVX, 312AAV, 312JAV, 315AAV, 315JAV 33.3-Inch High, Induced-Combustion, Hot-Surface Ignition. Single Stage, 2 Stage and Variable Speed Non-Condensing 4-Way Multipoise Furnaces with 42,000 through 154,000 Btuh gas input rates.

→• Section 2— (Page 13) Models 58WAV, 58PAV, 58ZAV, 58RAV, 395CAV, 383KAV, 376CAV, 373LAV, 393AAV, 58YAV, PG8UAA, PG8DAA, 58DXT, 58TMA, 58TUA, 58UHV, 58UXT, 58UXV, 330AAV, 330JAV, 331AAV, 331JAV, 333BAV, and 333JAV 40-inch high, Induced-Combustion, Hot-Surface Ignition, Single Stage, 2-Stage and Variable-Speed, Non-Condensing Furnaces. This kit is designed for use in furnaces with 40,000 through 154,000 Btuh gas input rates.

→•Section 3— (Page 20) Models 58MCA, 58MSA, 58MXA, 340MAV, 345MAV, 350MAV, 490AAV, and PG9MAA, 58MVP, 58MTA, 355MAV, and 352MAV, 4-Way Multipoise, Hot Surface Ignition, Condensing Furnaces. This kit is designed for use in furnaces with 40,000 through 140,000 Btuh gas input rates.

→This kit is designed for use in the furnaces listed above. The gas valve will be a White-Rodgers 36E or 36F series gas valve with either an electric control switch or a manual control knob.

→**IMPORTANT:** This kit can replace conversion kit KGANP25012SP for furnaces listed in Sections 2 and 3, as specified on unit rating plate, when gas valve is replaced with Two-Stage Gas Valve P/N EF33CW198 (White-Rodgers 36E55). Replacement gas valve is available through RCD.

⚠ **→WARNING: Improper installation, adjustment, alteration, service, maintenance, or use can cause carbon monoxide poisoning, explosion, fire, electrical shock, or other conditions, which could result in personal injury or death. Consult your distributor or branch for information or assistance. The qualified installer or agency must use only factory-authorized kits or accessories when servicing this product. Failure to follow instructions could result in serious injury, death or property damage.**

⚠ **WARNING: Gas supply MUST be shut off before disconnecting electrical power and proceeding with conversion.**

DESCRIPTION AND USAGE

This kit is designed for use in the furnaces listed above. See Table 1 for kit contents. To accommodate many different furnace models, more parts are shipped in kit than will be needed to complete conversion. When installation is complete, discard extra parts.

Table 1-Kit Contents

DESCRIPTION	PART NO.	QUANTITY
Main Burner Orifice (Drill Size 1.30mm)	LH32DB210	7
Main Burner Orifice (Drill Size 1.25mm)	LH32DB209	7
Main Burner Orifice (Drill Size No. 54)	LH32DB203	7
Main Burner Orifice (Drill Size No. 55)	LH32DB201	7
Main Burner Orifice (Drill Size No. 56)	LH32DB206	7
Screw, Spoiler	327593-401	7
Diverter Plate	323184-301	1
Low Gas Pressure Switch (Propane) (LGPS)	HK02LB008	1
Nipple	CA52JZ103	1
90° Street Elbow (1/8 in.)	CA15RA001	1
Male x Female X Female Tee (1/8 in.)	CA21JZ001	1
Splice Connector (1/4 in. Male, Both Ends)	66175D55	1
Splice Connector (3/16 in. Male, Both Ends)	HY89SC047	1
Orange Wire Assembly (18 in.)	W182X23--04--018	2
Orange Wire Assembly (12 in.)	W182X66--04--012	1
Yellow Wire Assembly (6 in.)	W182Y66--11--006	1
Yellow Wire Assembly (14 in.)	W182Y66--11--014	1
Yellow Wire Assembly (16 in.)	W182Y66--23--016	1
Wire Tie	HY76TB125	1
Conversion Rating Plate Label—Condensing Furnaces	327697-201	1
Conversion Rating Plate Label—Non-Condensing Furnaces	327697-204	1
Conversion Rating Plate Label—Non-Condensing Furnaces	327697-206	1
Conversion Rating Plate Label—Non-Condensing Furnaces	327697-207	1
Conversion Responsibility Label	327697-205	1
Gas Control Conversion Label (adjusted)	327697-202	1
Gas Control Conversion Label (converted)	327697-203	1
Installation Instructions	AG-GANP-29	1
Regulator Spring Kit (White—Propane-EF39ZW023) for White-Rodgers 36C,36E and 36F Valve	92-0659	1

SECTION 1

INSTALLATION

→SECTION 1— INDUCED-COMBUSTION, HOT-SURFACE IGNITION, SINGLE-STAGE, TWO-STAGE AND VARIABLE-SPEED, 33.3-INCH HIGH, NON-CONDENSING FURNACES

Single Stage Models			2—Stage Models		Variable Speed Models	
58STA	310AAV	PG8MAA	58CTS	312AAV	58CVA	315AAV
58DLA	311AAV	PG8JAA	58CTX	312JAV	58CVX	315JAV
58STX	310JAV					
58DLX	311JAV					

STEP 1—INSTALL MAIN BURNER ORIFICES AND BURNER SPOILER SCREWS

NOTE: See Fig. 2 for component location in UPFLOW orientation. Reorient component arrangement when furnace is installed in other positions.

SECTION 1

⚠ **CAUTION: DO NOT re-drill burner orifices. Improper drilling (burrs, out-of round holes, etc.) can cause excessive burner noise and misdirection of burner flames. This can result in flame impingement of the burners and heat exchangers, causing failure. Obtain new orifices if orifice size must be changed. (See Fig. 1.)**

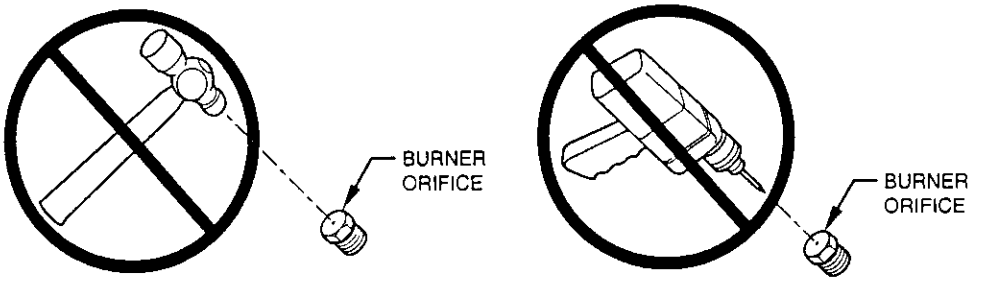

Fig. 1—Burner Orifice

A96249

1. Turn off furnace gas and electrical supplies.
2. Remove outer door.
3. Turn furnace gas valve switch to OFF position.
4. If furnace is oriented in a manner that the vent connector interferes with burner removal, remove vent connector from vent elbow inside the furnace. Support the remaining vent connector with temporary metal wire or straps to prevent damage to the remaining portions of the vent connector.
5. Remove gas supply pipe from gas valve (If installed).

Disconnect wires from gas valve.

⚠ **CAUTION: Label all wires prior to disconnection when servicing controls. Wiring errors can cause improper and dangerous operation.**

⚠ **ATTENTION: Lors des opérations d'entretien des commandes, étiqueter tous les fils avant de les déconnecter. Toute erreur de câblage peut être une source de danger et de panne.**

6. Remove the 2 screws on the left side that secure the manifold to the burner box.
7. Swing out manifold from burners then pull manifold out of right side of burner box. (See Fig. 2)
8. Remove and discard orifices from manifold.
9. Refer to conversion kit rating plate 327697-204 to determine main burner orifice size. (See Fig. 9)

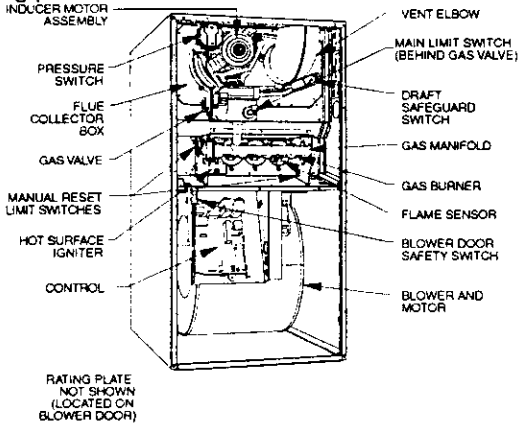

A02041

Fig. 2—Component Location

Gas input rate on furnace rating plate is for installations at altitudes up to 2000 ft. In the U.S.A., the input rating for altitudes above 2000 ft must be reduced by 4 percent for each 1000 ft above sea level.

In Canada, the input rating must be derated by 10 percent for altitudes of 2000 ft to 4500 ft above sea level.

The Conversion Kit Rating Plate accounts for high altitude derate.

10. Install main burner orifices. Do not use Teflon tape. Finger-tighten orifices at least 1 full turn to prevent cross-threading, then tighten with wrench. There are enough orifices in each kit for largest furnace. Discard extra orifices.

11. To install burner spoiler screws, follow the following steps:
    a. Disconnect Hot Surface Ignitor (HSI) wires from HSI
    b. Disconnect Flame Sensor wire from Flame Sensor
    c. Slide one-piece burner assembly out of slots on sides of burner box
    d. Remove the Hot Surface Ignitor (HSI) and bracket from the burner assembly
    e. Remove the flame sensor from the burner assembly
    f. Locate the dimple on each burner venturi tube
    g. Drill a 3/32" hole in each dimple
    h. Install a spoiler screw in each drilled hole as straight as possible

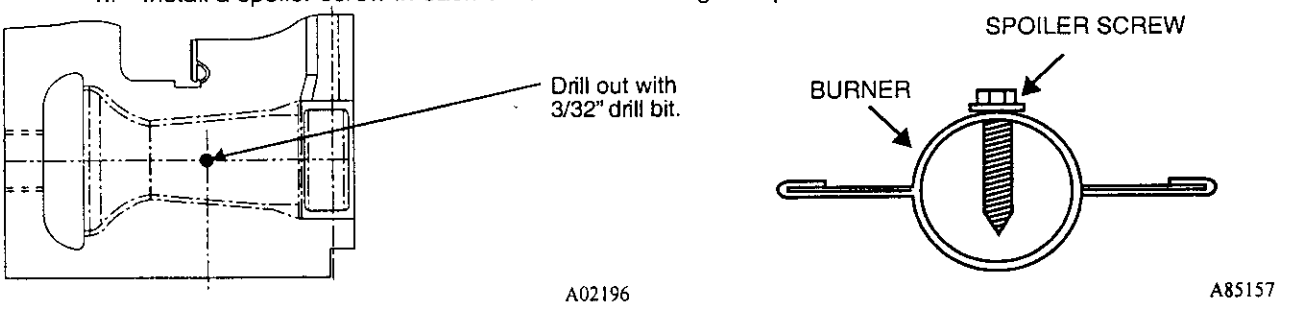

Fig. 3—Location of Dimple for Spoiler Screw

NOTE: Models 58CTX, 58CVX, 58DLX, 58STX, 310JAV, 311JAV, 312JAV, 315JAV and PG8JAA are supplied with NOx emissions-reduction devices necessary for use with Natural Gas in NOx emissions-regulated areas.

⚠ **CAUTION: Furnace models 58CTX, 58CVX, 58DLX, 58STX, 310JAV, 311JAV, 312JAV, 315JAV and PG8JAA MUST have low NOx devices removed prior to operating furnace on propane gas.**

---

12. For NOx device removal, follow the following additional steps:
    a. Remove the screw underneath the heat exchanger inlet that secures the NOX device in the heat exchanger (see Fig. 4)
    b. Use a pair of needle nose pliers to remove the NOx device. Squeeze the sides of the device if necessary to remove from the heat exchanger.
    c. Re-install screw in hole underneath heat exchanger inlet.

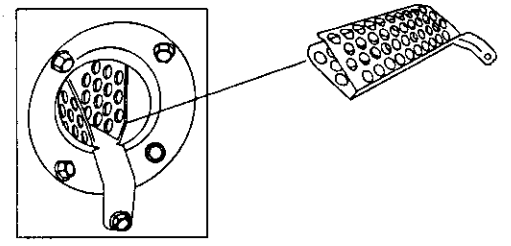

Fig. 4—NOx Device Location A02195

NOTE: It is very **IMPORTANT** to re-install the NOx bracket mounting screw.

d. Repeat steps "a" thru "c" for each heat exchanger

13. Re-install burner assembly by:
    a. Attach flame sensor to burner assembly
    b. Install HSI and bracket to burner assembly
    c. Insert one-piece burner in slot on sides of burner box and slide burner back in place.
    d. Re-attach HSI wires to HSI. Verify Ignitor to Burner alignment (See Fig. 30)
    e. Re-attach Flame sensor wire to Flame Sensor.

15. Reinstall manifold by inserting right end of manifold into opening in right side of burner box.
16. Swing manifold into burner assembly and insert orifices into openings on burners.
17. Verify that orifices are fully inserted into burners and burners are fully seated in burner box.
18. Secure manifold to left side of burner box, verifying that green ground wire is reattached to burner box.
19. Reconnect wires to gas valve per the wiring diagram supplied with the unit.

NOTE: Failure to attach ground wire to gas manifold on burner box will result in loss of flame signal resulting in a no heat condition.

NOTE: Use propane-gas resistant pipe dope to prevent gas leaks. DO NOT use Teflon tape.

STEP 2A—CONVERT SINGLE STAGE GAS VALVE

NOTE: The following furnaces must have the regulator spring replaced in the gas valve:

58STA	**310AAV**	**PG8MAA**
58DLA	**311AAV**	**PG8JAA**
58STX	**310JAV**	
58DLX	**311JAV**	

1. Be sure main gas and electrical supplies are off.
2. Remove regulator seal cap. (See Fig. 5A.)
3. Remove adjustment screw and natural gas regulator spring (silver).
4. Install propane gas regulator spring (white) in gas valve.
5. Turn regulator adjustment screw in 6 turns. Go to Step 3.

NOTE: DO NOT reinstall regulator seal cap at this time.

STEP 2B—PRE-ADJUST 2—STAGE GAS VALVE

NOTE: The following furnaces DO NOT need to have the regulator spring replaced in the gas valve. **BUT** the valve MUST be pre-adjusted for propane applications:

58CTS	**312AAV**	**58CVA**	**315AAV**
58CTX	**312JAV**	**58CVX**	**315JAV**

⚠ **CAUTION: The gas valve must be pre-adjusted before operating on propane gas. Failure to follow this caution could result in excess underfire and flashback. If left this way sooting and corrosion will occur leading to early heat exchanger failure.**

---

1. Be sure gas and electrical supplies to furnace are off.
2. Remove caps that conceal adjustment screws for high- and low-heat stage gas-valve regulators. (See Fig. 5B)
3. Turn **low-heat** stage adjusting screw (3/32-in. hex allen wrench) **clockwise (in) 1 full turn**. This will increase the manifold pressure closer to the propane low-heat set point.

4. Turn **high-heat** stage adjusting screw (3/32-in. hex allen wrench) **clockwise (in) 2 full turns**. This will increase the manifold pressure closer to the propane high-heat set point.
   a. Replace caps that conceal gas-valve regulator adjustment screws. Go to Step 3.

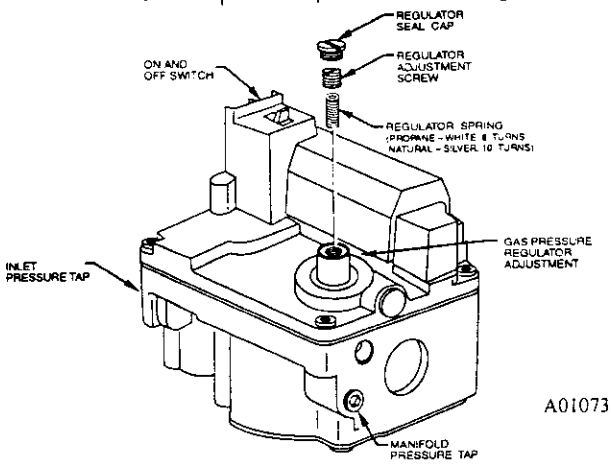

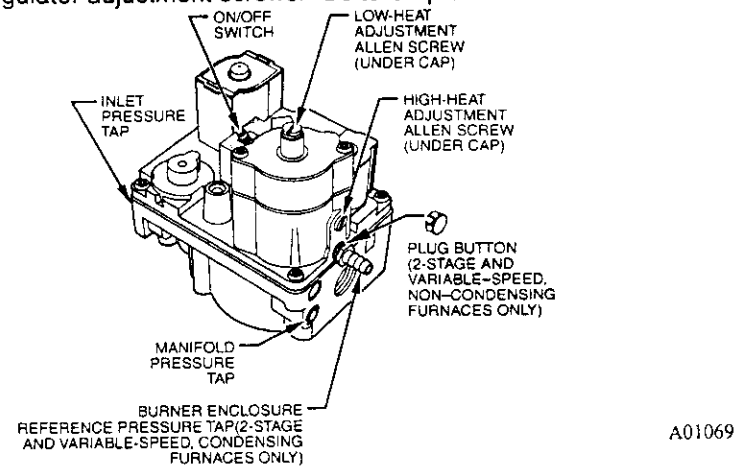

A01073

Fig. 5A—Single Stage Gas Valve

Fig. 5B— Two-Stage Gas Valve

STEP 3—INSTALL LOW GAS PRESSURE SWITCH (LGPS)

NOTE: The inlet gas pipe must be disconnected from valve so pressure switch can be installed.

NOTE: Use propane-gas-resistant pipe dope on all connections to prevent gas leaks. DO NOT use Teflon tape.

1. Be sure main gas and electric supplies to furnace are off.
2. Remove 1/8-in. pipe plug from inlet pressure tap on gas valve. (See Fig. 6.) DO NOT DISCARD 1/8" PLUG
3. Apply pipe dope sparingly to one end of 1/8" brass male coupling (provided in kit) and install the doped end in 1/8-in. tapped opening in gas valve inlet pressure-tap. Tighten fitting with a small open-end wrench. (See Fig. 6)

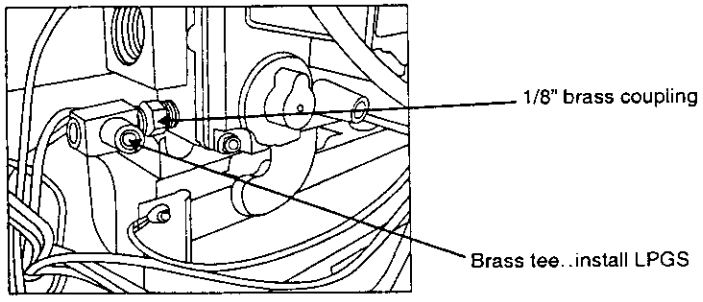

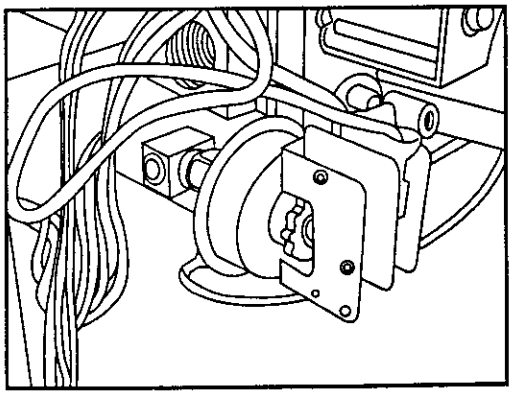

Fig. 6A—Gas Valve Inlet Pressure Tap

A02198

Fig. 6B—LGPS Installed

A02211

4. Apply pipe dope sparingly to opposite end of the 1/8" brass coupling (provided in kit). Install the female end of the female x female x male tee on the brass coupling. Tighten coupling finger tight. Use a small open-end wrench for final tightening.
5. Apply pipe dope sparingly to male end of brass tee. Install propane low gas pressure switch (provided in kit) on male end of the female x female x male tee. Tighten switch finger tight. Use a small open-end wrench on base of pressure switch for final tightening.
6. Connect a manometer to the open end of the tee installed in the gas valve. (See Fig. 6)
7. Apply pipe dope sparingly to end of inlet gas pipe and reconnect pipe to gas valve.

STEP 4—CHECK INLET GAS PRESSURE

NOTE: This kit is to be used only when inlet gas pressure is between 11.0-in. w.c. and 13.6-in. w.c.

Verify manometer is connected to inlet pressure tap on gas valve. (See Fig. 6A)

⚠ **CAUTION: DO NOT operate furnace more than 1 minute to check inlet gas pressure, as conversion is not complete at this time.**

For Two-Stage furnaces, perform the following on the control board:

a. Turn LHT switch on furnace control to ON (See. Fig. 7C)

For Variable Speed furnaces, perform the following on the control board:

a. Turn Setup Switch SW1-2 on furnace control ON (See Fig. 7D)

2. Turn on furnace power supply.
3. Turn gas supply manual shutoff valve to ON position.
4. Turn furnace gas valve switch to ON position.

5a. Jumper R-W thermostat connections on the Single Stage furnace control (See Fig. 7A or 7B) or

5b. Jumper R-W/W1 and R-W2 thermostat connections on the 2-Stage and Variable Speed furnace control (See Fig. 7C or 7D.). The two-stage algorithm must be removed to force furnace to high heat operation.

6. When main burners ignite, confirm inlet gas pressure is between 11.0-in. w.c. and 3.6-in. w.c.
7. Remove jumper across thermostat connections to terminate call for heat.
8. Turn furnace gas valve switch to OFF position.
9. Turn gas supply manual shutoff valve to OFF position.
10. Turn off furnace power supply.
11. Remove manometer.
12. Apply pipe dope sparingly to end of inlet gas pipe plug and install in unused end of 1/8" tee. Use a small back-up wrench on tee when tightening gas inlet pipe plug. (See Fig. 6)

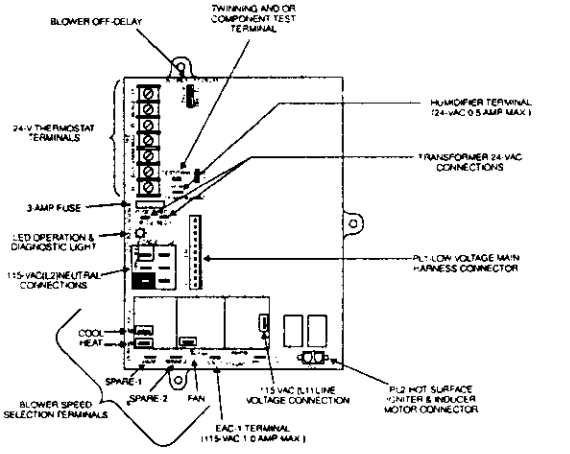

A02142

Fig. 7A-Standard Single Stage Control

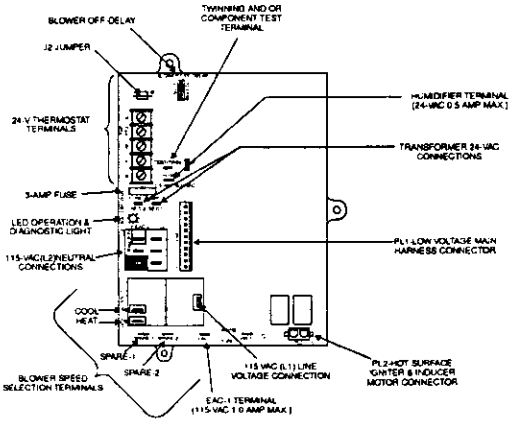

A02100

Fig. 7B-Deluxe Single Stage Control

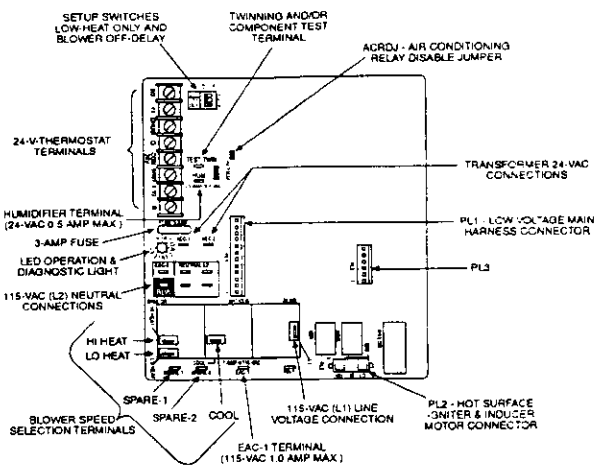

A02017

Fig. 7C-Two Stage Control

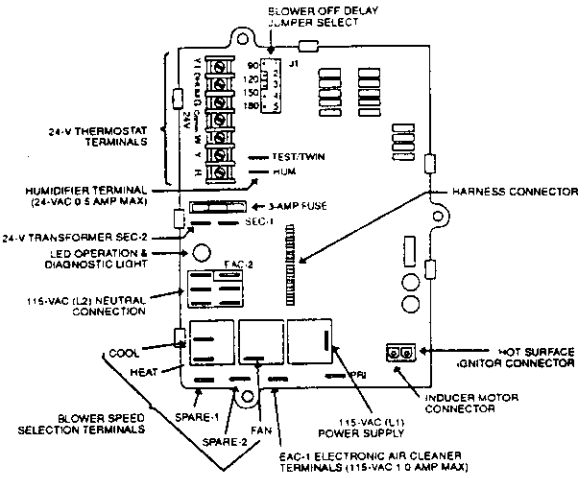

A02016

Fig. 7D-Variable Speed Control

STEP 5A—MODIFY SINGLE STAGE PRESSURE SWITCH WIRING (Refer to furnace wiring diagram)

1. Disconnect yellow wire from the N.O. contact of the pressure switch PRS and connect it to the N.O. terminal on the low gas pressure switch, LGPS.
2. Connect the insulated straight terminal of the 16-in. yellow wire (provided in kit) to the C terminal on the low gas pressure switch, LGPS.
3. Connect insulated flag terminal of 16-in. yellow wire to the N.O. terminal to pressure switch PRS.
4. Route yellow wires along wire harness. Secure with wire tie provided in kit. Go to Step 6.

STEP 5B—MODIFY 2—STAGE AND VARIABLE SPEED PRESSURE SWITCH WIRING (Refer to furnace wiring diagram)

1. Disconnect yellow wire from the N.O. contact of the low-heat pressure switch LPS and connect it to the N.O. terminal on the low gas pressure switch, LGPS.
2. Connect insulated straight terminal of 16-in. yellow wire (provided in kit) to C terminal on low gas pressure switch LGPS.
3. Connect insulated flag terminal of 16-in. yellow wire to N.O. terminal to low pressure switch LPS.
4. Route yellow wires along wire harness. Secure with wire tie provided in kit. Go to Step 6.

STEP 6—CHECK FURNACE OPERATION AND MAKE NECESSARY ADJUSTMENTS

1. Be sure main gas and electric supplies to furnace are off.
2. Remove 1/8-in. pipe plug from manifold pressure tap on downstream side of gas valve. (See Fig. 5A or 5B)
3. Attach manometer to manifold pressure tap on gas valve.

NOTE: The 1/8 inch NPT street ell included in the kit may be attached to the gas valve manifold pressure tap or a field supplied 90 degree 1/8 inch NPT barbed fitting may be simplify manometer connection to gas valve when vent connector passes inside furnace casing. (See Fig 8.) The street ell may be left in place on gas valve when plug from manifold pressure tap in installed in street ell.

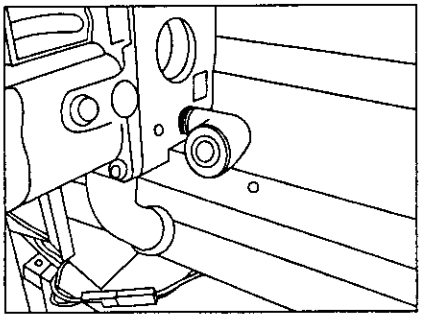

A02197

Fig. 8 - Plug removed from gas valve. Street ell installed and plug reinstalled in ell.

4. Turn gas supply manual shutoff valve to ON position.
5. Turn furnace gas valve switch to ON position.
6. Check all threaded pipe connections for gas leaks.
7. Turn on furnace power supply.

⚠ WARNING: NEVER use matches, candles, flame, or other sources of ignition to check for gas leakage. Use a soap-and-water solution to check for leaks. Failure to follow this warning could result in fire, explosion, personal injury, or death.

STEP 7—SET GAS INPUT RATE

CONVERSION KIT RATING PLATE - CARRIER CORP.

THIS APPLIANCE HAS BEEN CONVERTED TO USE PROPANE GAS FOR FUEL. REFER TO KIT INSTRUCTIONS FOR CONVERSION PROCEDURES. USE PARTS SUPPLIED BY CARRIER CORPORATION AND INSTALLED BY QUALIFIED PERSONNEL. SEE EXISTING RATING PLATE FOR APPLIANCE MODEL NO. AND INPUT RATING.

NOTE: Furnace gas input rate on rating plate is for installations up to 2000 ft above sea level. In U.S.A. the input rating for altitudes above 2000 ft must be derated by 4% for each 1000 ft above sea level. In Canada the input rating must be derated by 10% for altitudes of 2000 ft to 4500 ft above sea level.

FUEL USED: PROPANE GAS

KIT NO. KGANP2901ALL (SUPERSEDES KGANP2701LPS, KGANP2801F80) INLET PRESSURE (min. - max): 11.0 - 13.6 in. wc

APPLIANCE MODELS		ALTITUDE OF INSTALLATION (FT. ABOVE SEA LEVEL) U.S.A. *								
		0 to 2000	2001 * to 3000	3001 to 4000	4001 to 5000	5001 to 6000	6001 to 7000	7001 to 8000	8001 to 9000	9001 to 10000
310AAV, 310JAV, 311AAV, 311JAV, 58STA, 58STX, 58DLA, 58DLX, PG8MAA, PG8JAA	Orifice No	55	1.30mm	1.30mm	1.25mm	1.25mm	1.25mm	56	56	56
	Mnfld Press	11.0	11.0	10.5	11.0	11.0	10.5	11.0	11.0	10.5
312AAV, 312JAV, 315AAV, 315JAV, 58CTA, 58CTX, 58CVA, 58CVX.	Orifice No.	55	1.30mm	1.30mm	1.25mm	1.25mm	1.25mm	56	56	56
	Mnfld Press High / Low	11.0 / 5.8	11.0 / 5.3	10.5 / 5.0	11.0 / 5.5	11.0 / 5.2	10.5 / 4.9	11.0 / 5.7	11.0 / 5.2	10.5 / 4.8

* For Canadian Installations from 2000 to 4500 ft use U.S.A. column 2001 to 3000 ft. 327697-204 REV. A

A02192

Fig. 9 - Conversion Kit Rating Plate

The gas-input rate for propane is the same as for natural gas. See furnace rating plate for input rate. The input rate for propane is determined by manifold pressure and orifice size. On two-stage furnace models, the gas-valve regulator must be set for high heat and set for low heat. (See kit rating plate 327697-204, Fig. 9)

Gas input rate on furnace rating plate is for installations at altitudes up to 2000 ft. In the U.S.A., the input rating for altitudes above 2000 ft must be reduced by 4 percent for each 1000 ft above sea level.

In Canada, the input rating must be derated by 10 percent for altitudes of 2000 ft to 4500 ft above sea level.

The Conversion Kit Rating Plate accounts for high altitude derate.

STEP 7A—SET GAS INPUT RATE ON SINGLE STAGE FURNACES

1. Jumper R and W thermostat connections to call for heat. (See Fig. 7A or 7B)
2. Check manifold orifices for gas leaks when main burners ignite.
3. Adjust gas manifold pressure.
   a. Turn adjusting screw counterclockwise (out) to decrease manifold pressure or clockwise (in) to increase manifold pressure. (See Fig. 5A)

NOTE: Gas valve regulator seal cap **MUST** be in place when checking input rate.

   b. When correct input is obtained, main burner flame should be clear blue, almost transparent. Be sure regulator seal cap is in place when finished.
4. Remove jumper across R and W thermostat connections to terminate call for heat.
5. Turn furnace gas valve control switch or control knob to OFF position.
6. Turn off furnace power supply.
7. Remove manometer and replace manifold pressure tap plug.

NOTE: Use propane-gas-resistant pipe dope to prevent gas leaks. DO NOT use Teflon tape.

8. Turn furnace gas valve control switch or control knob to ON position.

9. Turn on furnace power supply.
10. Set room thermostat to call for heat.
11. Check manifold pressure tap plug for gas leaks when main burners ignite.
12. Observe unit operation through 2 complete heating cycles. See sequence of operation in furnace Installation, Start-up and Operating Instructions.
13. Set room thermostat to desired temperature.

STEP 7B—SET TWO-STAGE or VARIABLE SPEED GAS INPUT RATE
For Two-Stage furnaces, perform the following on the control board:

1. Make sure LHT switch on furnace control to ON. (See Fig. 7C)
2. Jumper R and W/W1 thermostat connection on furnace control
3. Check manifold orifices for gas leaks when main burners ignite. Go to Step 4.

For Variable Speed furnaces, perform the following on the control board:

1. Make sure Setup Switch SW1-2 on furnace control ON. (See Fig. 7D)
2. Jumper R and W/W1 thermostat connection on furnace control.
3. Check manifold orifices for gas leaks when main burners ignite. Go to Step 4.

4. Adjust gas manifold pressure.
   a. Remove caps that conceal adjustment screws for gas-valve regulators. (See Fig. 5B)
   b. Jumper R, W/W1 thermostat connections on control. (See Fig. 7C or 7D.) Adjust low-heat input rate manifold pressure for propane gas. (See kit rating plate 327697-204, Fig. 9) (**Note: Gas valve should already have been pre-adjusted, from prior steps for two-stage gas valve)** Turn low-heat adjusting screw (5/64 hex allen wrench) counterclockwise (out) to decrease input rate or clockwise (in) to increase input rate.
   c. Jumper R, W/W1 and W2 thermostat connections on control. This keeps furnace in high-heat.
   d. Adjust high-heat input rate manifold pressure for propane gas. (See kit rating plate 327697-204 Fig. 9) Turn high-heat adjusting screw.
   e. (5/64 hex allen wrench) counterclockwise (out) to decrease input rate or clockwise (in) to increase input rate.
   f. Main burner flame should be clear blue, almost transparent.
   g. Remove jumper across R, W/W1 and W2 after high-heat adjustment.
   h. Replace caps that conceal gas-valve-regulator adjustment screws.

5. Turn setup switch LHT (two-stage) or SW-2 (variable speed) switch to OFF position.
6. Turn furnace gas valve switch to OFF.
7. Turn off furnace power supply.
8. Remove manometer and replace manifold pressure tap plug. (See Fig. 5A or 5B)

NOTE: Use propane-gas-resistant pipe dope to prevent gas leaks. DO NOT use Teflon tape.

9. Turn on furnace power supply.
10. Turn furnace gas valve switch to ON position.
11. Set room thermostat to call for heat.
12. Check pressure tap plug for gas leaks when main burners ignite.
13. When correct input is obtained, main burner flame should be clear blue, almost transparent. (See Fig. 29)
14. Observe unit operation through 2 complete heating cycles. See sequence of operation in furnace Installation, Start-Up, and Operating Instructions.
15. Set room thermostat to desired temperature.

STEP 8—CHECK LOW GAS PRESSURE SWITCH OPERATION
The newly installed low gas pressure switch is a safety device used to guard against adverse burner operating characteristics that can result from low gas supply pressure. Switch opens at not less than 6.5"w.c. and closes at not greater than 10.2"w.c.

This switch also prevents operation when the propane tank level is low which can result in gas with a high concentration of impurities, additives, and residues that have settled to the bottom of the tank. Operation under these conditions can cause harm to the heat exchanger system.

This normally open switch closes when gas is supplied to gas valve under normal operating pressure. The closed switch completes control circuit. Should an interruption or reduction in gas supply occur, the gas pressure at switch drops below low gas pressure switch setting, and switch opens. Any interruption in control circuit (in which low gas pressure switch is wired) quickly closes gas valve and stops gas flow to burners.

When normal gas pressure is restored, the system must be electrically reset to re-establish normal heating operation.

Before leaving installation, observe unit operation through 2 complete heating cycles. During this time, turn gas supply to gas valve off just long enough to completely extinguish burner flame, then instantly restore full gas supply. To ensure proper low gas pressure switch operation, observe that there is no gas supply to burners until after hot surface ignitor begins glowing.

STEP 9—LABEL APPLICATION

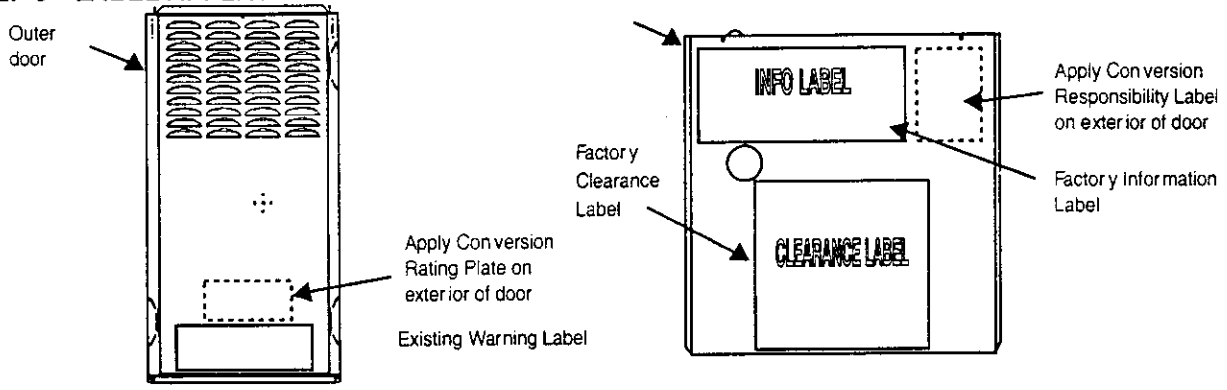

Fig. 10—Label Application A02203

1. Fill in Conversion Responsibility Label (327697-205) and apply to Blower Access Door of furnace as shown. (See Fig. 10) Date, name, and address of organization making this conversion are required.
2. Attach Conversion Rating Plate Label (327697-204, Fig. 9) to Outer Door of furnace.
3. Apply Gas Control Conversion Label to gas valve:
   a. For single-stage gas valve apply label 327697-203 to gas valve. (Do not use 327697-202, which is similar)
   b. For two-stage gas valve apply label 326752-202 to gas valve. (Do not use 327697-203, which is similar)
4. Check for correct normal operating sequence of the ignition system as described in furnace Installation, Start-Up, and Operating Instructions.
5. Replace control access door.

Single Stage Models			Two-Stage Models		Variable Speed Models	
58PAV	383KAV	PG8UAA	58TUA	330AAV	58UHV	333BAV
58WAV	395CAV	PG8DAA	58TMA	331AAV	58UXV	333JAV
58RAV	373LAV	393AAV	58UXT	330JAV		
58ZAV	376CAV	58YAV	58DXT	331JAV		

STEP 1—INSTALL MAIN BURNER ORIFICES

NOTE: See Fig. 11A or 11B for component location.

1. Turn off furnace gas and electrical supplies.
2. Remove control access door.
3. Turn furnace gas valve switch to OFF position.
4. Remove gas supply pipe from gas valve (if installed).

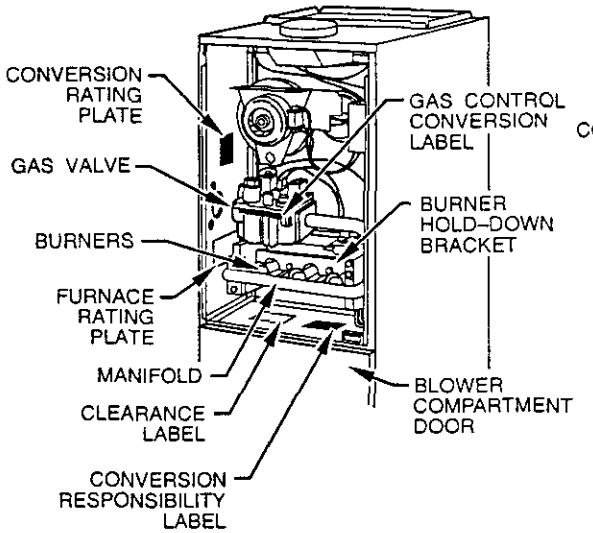

Fig. 11A – Downflow and Downflow/Horizontal, Standing Pilot, Fixed Speed, Non-Condensing Furnace Component and Conversion Label

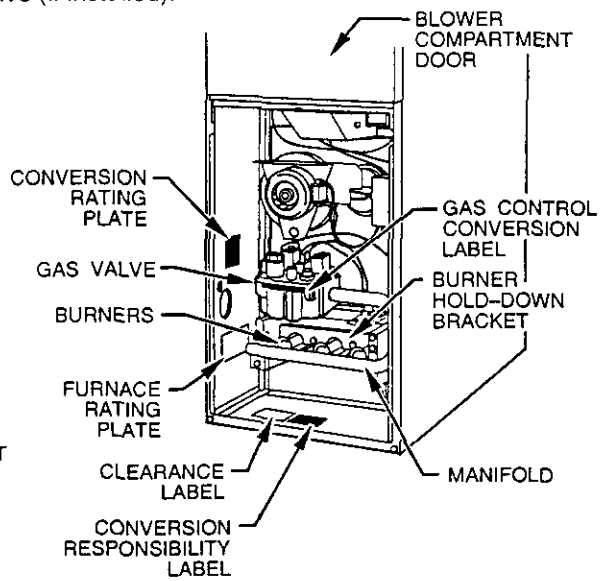

Fig. 11B – Upflow and Upflow/Horizontal, Standing Pilot, Fixed Speed, Non-Condensing Furance Component and Conversion Label

⚠ **CAUTION: Label all wires prior to disconnection when servicing controls. Wiring errors can cause improper and dangerous operation.**

⚠ **ATTENTION: Lors des opérations d'entretien des commandes, étiqueter tous les fils avant de les déconnecter. Toute erreur de câblage peut être une source de danger et de panne.**

5. Remove wires from gas valve. Note location for reassembly.
6. Remove wires from flame sensor and flame rollout safety switch(es).
7. Disconnect harness from hot surface igniter.
8. Remove the 4 screws that secure the gas manifold to the burner assembly. Note the location of the green ground wire attached to the manifold for reassembly.
9. Remove the manifold.

NOTE: Models 58DXT, 58UXT, 58UXV, 330JAV, 331JAV and 333JAV are supplied with NOX emissions-reduction devices necessary for use with Natural Gas in NOx emissions-regulated areas.

For 58UXT, 58DXT, 58UHV, 330JAV, 331JAV and 333BAV, remove NOX emissions-reducing device as follows: Using needle nose pliers, remove coil from bracket on each heat exchanger cell inlet plate. (See Fig. 12)

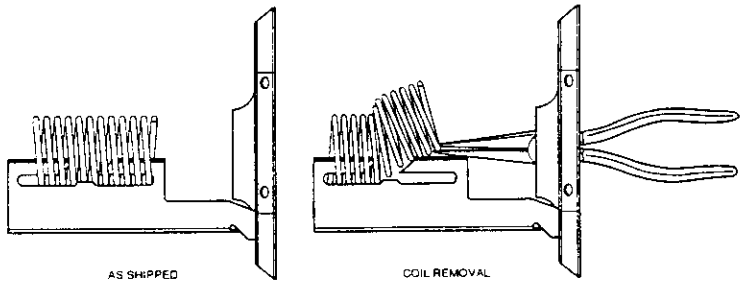

A95171

Fig. 12 - Removal of Low NOx

⚠ **CAUTION: Furnace models 58DXT, 58UXT, 58UXV, 330JAV, 331JAV, and 333JAV, must have low NOX coils removed prior to operating furnace on propane gas.**

10. Remove and discard orifices from manifold.
11. Refer to conversion kit rating plate 327697-206 (Single Stage, see Fig. 13) or 327697-207 (Two Stage, see Fig. 14) to determine main burner orifice size.

CONVERSION KIT RATING PLATE - CARRIER CORP.

THIS APPLIANCE HAS BEEN CONVERTED TO USE PROPANE GAS FOR FUEL. REFER TO KIT INSTRUCTIONS FOR CONVERSION PROCEDURES. USE PARTS SUPPLIED BY CARRIER CORPORATION AND INSTALLED BY QUALIFIED PERSONNEL. SEE EXISTING RATING PLATE FOR APPLIANCE MODEL NO. AND INPUT RATING.

NOTE: Furnace gas input rate on rating plate is for installations up to 2000 ft above sea level. In U.S.A. the input rating for altitudes above 2000 ft must be derated by 4% for each 1000 ft above sea level. In Canada the input rating must be derated by 10% for altitudes of 2000 ft to 4500 ft above sea level.

KIT NO. KGANP2901ALL (SUPERSEDES: KGANP2701LPS, KGANP2801F80) FUEL USED: PROPANE GAS INLET PRESSURE (min. - max): 11.0 - 13.6 in. wc

APPLIANCE MODELS		ALTITUDE OF INSTALLATION (FT. ABOVE SEA LEVEL) U.S.A. *								
		0 to 2000	2001 * to 3000	3001 to 4000	4001 to 5000	5001 to 6000	6001 to 7000	7001 to 8000	8001 to 9000	9001 to 10000
373LAV, 376CAV, 58RAV, 58ZAV, PG8CAA	Orifice No.	54	55	55	55	55	1.25mm	1.25mm	1.25mm	56
	Mnfld Press	11.0	11.0	11.0	10.5	10.0	11.0	10.5	10.0	11.0
383KAV, 393AAV, 395CAV, 58PAV, 58WAV, 58YAV, PG8UAA	Orifice No.	54	55	55	1.25mm	1.25mm	1.25mm	1.25mm	56	56
	Mnfld Press	10.0	10.5	10.0	11.0	11.0	10.5	10.0	11.0	10.0

* For Canadian installations from 2000 to 4500 ft use U.S.A. column 2001 to 3000 ft. 327697-206 REV A

A02192

Fig. 13 - Conversion Kit Rating Plate – Single Stage Units

CONVERSION KIT RATING PLATE - CARRIER CORP.

THIS APPLIANCE HAS BEEN CONVERTED TO USE PROPANE GAS FOR FUEL. REFER TO KIT INSTRUCTIONS FOR CONVERSION PROCEDURES. USE PARTS SUPPLIED BY CARRIER CORPORATION AND INSTALLED BY QUALIFIED PERSONNEL. SEE EXISTING RATING PLATE FOR APPLIANCE MODEL NO. AND INPUT RATING.

NOTE: Furnace gas input rate on rating plate is for installations up to 2000 ft above sea level. In U.S.A. the input rating for altitudes above 2000 ft must be derated by 4% for each 1000 ft above sea level. In Canada the input rating must be derated by 10% for altitudes of 2000 ft to 4500 ft above sea level.

KIT NO. KGANP2901ALL (SUPERSEDES: KGANP2701LPS, KGANP2801F80) FUEL USED: PROPANE GAS INLET PRESSURE (min. - max): 11.0 - 13.6 in. wc

APPLIANCE MODELS		ALTITUDE OF INSTALLATION (FT. ABOVE SEA LEVEL) U.S.A. *								
		0 to 2000	2001 * to 3000	3001 to 4000	4001 to 5000	5001 to 6000	6001 to 7000	7001 to 8000	8001 to 9000	9001 to 10000
331AAV, 331JAV, 58DXT, 58TMA	Orifice No.	55	55	1.25mm	1.25mm	1.25mm	56	56	56	57
	Mnfld Press High / Low	11.0 / 4.7	10.0 / 4.2	11.0 / 4.7	11.0 / 4.5	10.0 / 4.2	11.0 / 4.9	11.0 / 4.6	10.0 / 4.2	11.0 / 5.3
330AAV, 330JAV, 333BAV, 333JAV, 58TUA, 58UHV, 58UXT, 58UXV	Orifice No.	55	1.25mm	1.25mm	1.25mm	56	56	56	57	57
	Mnfld Press High / Low	10.0 / 4.3	11.0 / 4.6	10.5 / 4.4	10.0 / 4.2	11.0 / 4.9	11.0 / 4.5	10.0 / 4.2	11.0 / 5.3	11.0 / 4.9

* For Canadian installations from 2000 to 4500 ft use U.S.A. column 2001 to 3000 ft. 327697-207 REV A

A02190

Fig. 14 - Conversion Kit Rating Plate – Two-Stage Units

Furnace gas input rate on rating plate is for installations at altitudes up to 2000 ft. In the U.S.A., the input rating for altitudes above 2000 ft must be reduced by 4 percent for each 1000 ft above sea level.

In Canada, the input rating must be derated by 10 percent for altitudes of 2000 ft to 4500 ft above sea level.

The Conversion Kit Rating Plate accounts for high altitude derate.

12. Install main burner orifices. Do not use Teflon tape. Finger-tighten orifices at least 1 full turn to prevent cross threading and then tighten with wrench. There are enough orifices in each kit for largest furnace. Discard extra orifices. Orifices of other sizes must be field supplied and are available through your local distributor.
13. For units equipped with NOx devices, NOx coil must be removed. (See Fig. 12)

⚠ **CAUTION: DO NOT re-drill burner orifices. Improper drilling (burrs, out-of round holes, etc.) can cause excessive burner noise and misdirection of burner flames. This can result in flame impingement of the burners and heat exchangers, causing failure. Obtain new orifices if orifice size must be changed. (See Fig. 1)**

---

14. Reinstall manifold with 4 screws removed in Step 8. Burners should be checked for proper alignment of the burner crossover slot. Verify green ground wire is attached to burner manifold

Note: Failure to attach ground wire to gas manifold on burner box will result in loss of flame signal resulting in a no heat condition.

15. Reconnect wires to flame sensor and flame rollout safety switch(es). See the furnace wiring label to ensure proper location of wires.
16. Reconnect ignitor wire connector. Verify Ignitor to Burner alignment. (See Fig. 31)
17. Reconnect wires to gas valve. See wiring label on furnace to ensure proper location of wires.
18. Reconnect gas supply pipe to gas valve using backup wrench on gas valve to prevent rotation and improper orientation.

NOTE: Use propane-gas resistant pipe dope to prevent gas leaks. DO NOT use Teflon tape.

STEP 2A—CONVERT SINGLE STAGE GAS VALVE

NOTE: The following furnaces must have the regulator spring replaced in the gas valve:

58PAV	383KAV	PG8UAA
58WAV	395CAV	PG8DAA
58RAV	373LAV	393AAV
58ZAV	376CAV	58YAV

1. Be sure main gas and electrical supplies are off.
2. Remove regulator seal cap. (See Fig. 15A)
3. Remove adjustment screw and natural gas regulator spring (silver).
4. Install propane gas regulator spring (white) in gas valve.
5. Turn regulator adjustment screw in 6 turns.

NOTE: DO NOT reinstall regulator seal cap at this time.

STEP 2B—PRE-ADJUST 2 STAGE GAS VALVE

NOTE: The following furnaces DO NOT need have the regulator spring replaced in the gas valve. The valve MUST be pre-adjusted for propane applications:

58TUA	330AAV	58UHV	333BAV
58TMA	331AAV	58UXV	333JAV

58UXT	330JAV		
58DXT	331JAV		

⚠ **CAUTION: The gas valve must be pre-adjusted before operating on propane gas. Failure to follow this caution could result in excess underfire and flashback. If left this way, sooting and corrosion will occur leading to early heat exchanger failure.**

1. Be sure gas and electrical supplies to furnace are off.
2. Remove caps that conceal adjustment screws for high-and low-heat stage gas valve regulators. (See Fig. 15B)
3. Turn **low-heat** stage adjusting screw (3/32-in. hex allen wrench) **clockwise (in) 1 full turn**. This will increase the manifold pressure closer
4. to the propane low-heat set point.
5. Turn **high-heat** stage adjusting screw (3/32-in. hex allen wrench) **clockwise (in) 2 full turns**. This will increase the manifold pressure closer
6. to the propane high-heat set point.
7. Replace caps that conceal gas valve regulator adjustment screws.

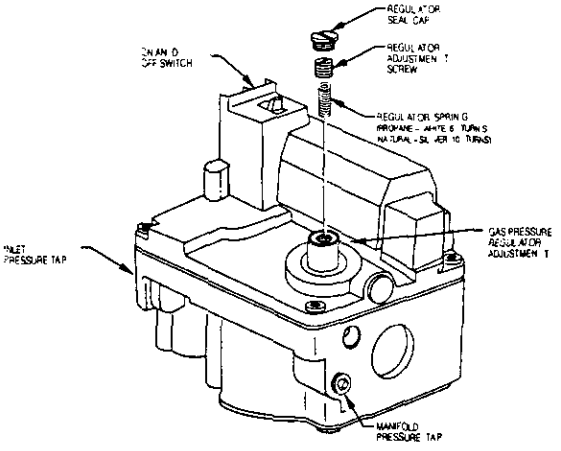

Fig. 15A - Single Stage Gas A01073

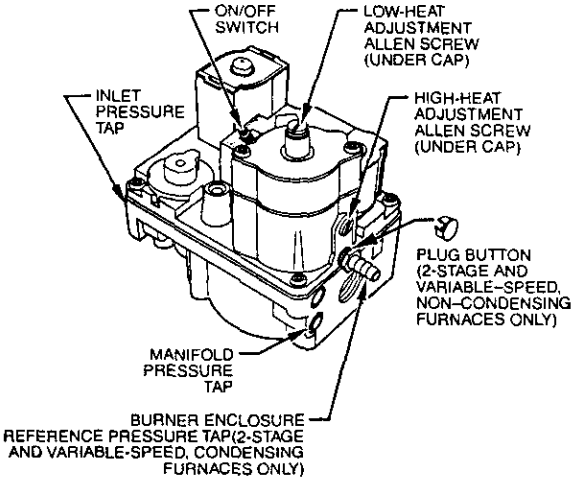

Fig. 15B - 2-Stage Gas Valve A01069

STEP 3—INSTALL LOW GAS PRESSURE SWITCH (LGPS)

NOTE: Use propane-gas-resistant pipe dope on all connections to prevent gas leaks. DO NOT use Teflon tape.

1. Be sure main gas and electric supplies to furnace are off.
2. Remove 1/8-in. pipe plug from inlet pressure tap on gas valve. (See Fig. 16) DO NOT DISCARD 1/8" PLUG.
3. Apply pipe dope sparingly to one end of 1/8" brass male coupling (provided in kit) and install the doped end in 1/8-in. tapped opening in gas valve inlet pressure-tap. Tighten fitting with a small open-end wrench. (See Fig. 6A)
4. Apply pipe dope sparingly to opposite end of the 1/8" brass coupling (provided in kit). Install the female end of the female x female x male tee on the brass coupling. Tighten coupling finger tight. Use a small open-end wrench for final tightening.
5. Apply pipe dope sparingly to male end of brass tee. Install propane low gas pressure switch (provided in kit) on male end of the female x female x male tee. Tighten switch finger tight. Use a small open-end wrench on base of pressure switch for final tightening. When pressure switch is tight, switch terminals should point as shown in Fig. 6B relative to gas valve and clear control compartment access door.
6. Connect a manometer to the open end of the tee installed in the gas valve. (See Fig. 6A)

STEP 4—CHECK INLET GAS PRESSURE

NOTE: This kit is to be used only when inlet gas pressure is between 11.0-in. w.c. and 13.6-in. wc..

1. Verify manometer is connected to inlet pressure tap on gas valve. (See Fig. 6A)

⚠ **CAUTION: DO NOT operate furnace more than 1 minute to check inlet gas pressure, as conversion is not complete at this time.**

---

2. Turn on furnace power supply.
3. Turn gas supply manual shutoff valve to ON position.
4. Turn furnace gas valve switch to ON position.

5a. Jumper R-W thermostat connections on the Single Stage furnace control

5b. Jumper R-W/W1 and R-W2 thermostat connections on the 2-Stage and Variable Speed furnace control.

6. When main burners ignite, confirm inlet gas pressure is between 11.0-in. w.c. and 13.6-in. w.c..
7. Remove jumper across R to W or R-W/W1 and R-W2 thermostat connections to terminate call for heat.
8. Turn furnace gas valve switch to OFF position.
9. Turn gas supply manual shutoff valve to OFF position.
10. Turn off furnace power supply.
11. Remove manometer.
12. Apply pipe dope sparingly to end of inlet gas pipe plug and install in unused end of 1/8" tee. Use a small back-up wrench on tee when tightening gas inlet pipe plug. (See Fig. 6A)

STEP 5A—MODIFY SINGLE STAGE PRESSURE SWITCH WIRING

1. Disconnect yellow wire from the N.O. contact of the pressure switch PRS on the inducer housing and connect it to the N.O. terminal on the low gas pressure switch, LGPS.
2. Connect the insulated straight terminal of the 16-in. yellow wire (provided in kit) to the C terminal on the low gas pressure switch, LGPS.
3. Connect insulated flag terminal of 16-in. yellow wire to the N.O. terminal to pressure switch PRS located on inducer housing.
4. Route yellow wires along wire harness.
5. Secure with wire tie provided in kit. Go to Step 6.

STEP 5B—MODIFY TWO-STAGE AND VARIABLE SPEED PRESSURE SWITCH WIRING

1. Disconnect yellow wire from low-heat pressure switch LPS on inducer housing. Add 3/16-in. splice connector to this wire.
2. Connect uninsulated terminal of 6-in. yellow wire (provided in kit) to splice connector. Connect other end to C terminal on low gas pressure switch LGPS.
3. Connect insulated terminal of 14-in. yellow wire (provided in kit) to NO terminal on low gas pressure switch LGPS. Connect other end to pressure switch LPS located on inducer housing.
4. Route yellow wires along wire harness. Secure with wire tie provided in kit. Go to Step 6.

STEP 6—CHECK FURNACE OPERATION AND MAKE NECESSARY ADJUSTMENTS

1. Be sure main gas and electric supplies to furnace are off.
2. Remove 1/8-in. pipe plug from manifold pressure tap on downstream side of gas valve. (Fig. 15A or 15B)
3. Attach manometer to manifold pressure tap on gas valve. (See Fig. 15A)
4. Turn gas supply manual shutoff valve to ON position.
5. Turn furnace gas valve switch to ON position.
6. Check all threaded pipe connections for gas leaks.
7. Turn on furnace power supply.

⚠ **WARNING: NEVER use matches, candles, flame, or other sources of ignition to check for gas leakage. Use a soap-and-water solution to check for leaks. Failure to follow this warning could result in fire, explosion, personal injury, or death.**

STEP 7—SET GAS INPUT RATE

The gas-input rate for propane is the same as for natural gas. See furnace rating plate for input rate. The input rate for propane is determined by manifold pressure and orifice size. Refer to the appropriate Conversion Kit Rating Plate.

Gas input rate on furnace rating plate is for installations at altitudes up to 2000 ft. In the U.S.A., the input rating for altitudes above 2000 ft must be reduced by 4 percent for each 1000 ft above sea level.

In Canada, the input rating must be derated by 10 percent for altitudes of 2000 ft to 4500 ft above sea level.

The Conversion Kit Rating Plate accounts for the high altitude derate.

STEP 7A—SET GAS INPUT RATE ON SINGLE STAGE FURNACES

1. Jumper R and W thermostat connections to call for heat.
2. Check manifold orifices for gas leaks when main burners ignite.
3. Adjust gas manifold pressure. Turn adjusting screw counterclockwise (out) to decrease manifold pressure or clockwise (in) to increase manifold pressure. Refer to Conversion Kit Rating Plate #327697-206. (Single-Stage)

NOTE: Gas valve regulator seal cap **MUST** be in place when checking input rate.

4. When correct input is obtained, main burner flame should be clear blue, almost transparent (See Fig. 29). Be sure regulator seal cap is in place when finished.
5. Remove jumper across R and W thermostat connections to terminate call for heat.
6. Turn furnace gas valve control switch or control knob to OFF position.
7. Turn off furnace power supply.
8. Remove manometer and replace manifold pressure tap plug.

NOTE: Use propane-gas-resistant pipe dope to prevent gas leaks. DO NOT use Teflon tape.

9. Turn furnace gas valve control switch or control knob to ON position.
10. Turn on furnace power supply.
11. Set room thermostat to call for heat.
12. Check manifold pressure tap plug for gas leaks when main burners ignite.
13. Observe unit operation through 2 complete heating cycles. See sequence of operation in furnace Installation, Start-up and Operating Instructions.
14. Set room thermostat to desired temperature. Go to **STEP 8**.

For Two-Stage and variable speed furnaces, perform the following:

a) Turn switch #2 (low heat) on furnace control to ON (See. Fig. 17)
b) Jumper R and W/W1 thermostat connection on furnace control
c) Check manifold orifices for gas leaks when main burners ignite.
d) Proceed to **STEP 7B**.

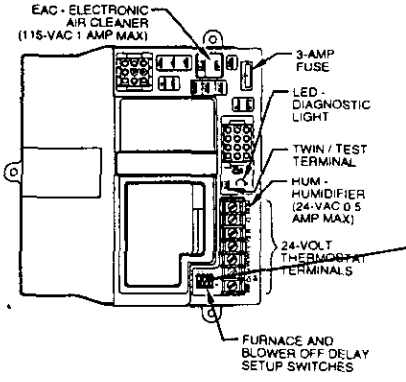

Fig. 17A – Furnace Control for 2-Stage Condensing Furnace and 2-Stage / Variable-Speed, Non-Condensing Furnaces

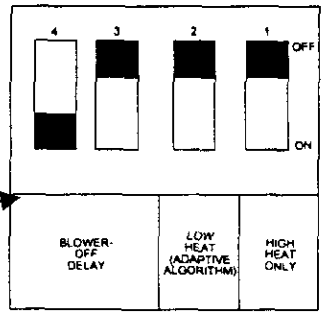

Fig. 17B – Setup Switches on Furnace Control for 2-Stage Condensing Furnace and 2-Stage / Variable-Speed, Non-Condensing Furnaces (Factory Settings Shown)

STEP 7B—SET GAS INPUT RATE ON TWO-STAGE AND VARAIBLE SPEED FURNACES.

1. Adjust gas manifold pressure. Refer to Conversion Kit Rating Plate #327697-207 (Two-Stage)
   a. Remove caps that conceal adjustment screws for gas-valve regulators. (See Fig. 15B)
   b. Adjust low-heat input rate manifold pressure for propane gas. (See kit rating plate 327697-207, see Fig. 14) Turn low-heat adjusting screw (5/64 hex allen wrench) counterclockwise (out) to decrease input rate or clockwise (in) to increase input rate.
   c. Jumper R and W2 thermostat connections on control. This keeps furnace in high-heat.
   d. Adjust high-heat input rate manifold pressure for propane gas. (See kit rating plate 327697-207) Turn high-heat adjusting screw (5/64 hex allen wrench) counterclockwise (out) to decrease input rate or clockwise (in) to increase input rate.
   e. Remove jumper across R and W2 after high-heat adjustment.
   f. Replace caps that conceal gas-valve-regulator adjustment screws.

2. Remove jumper across R, W1 and W2 thermostat connections to terminate call for heat.
3. Turn setup switch to SW-2 to OFF position.
4. Turn furnace gas valve switch to OFF.
5. Turn off furnace power supply.
6. Remove manometer and replace manifold pressure tap plug.

NOTE: Use propane-gas-resistant pipe dope to prevent gas leaks. DO NOT use Teflon tape.

7. Turn on furnace power supply.
8. Turn furnace gas valve switch to ON position.
9. Set room thermostat to call for heat.
10. Check pressure tap plug for gas leaks when main burners ignite.
11. When correct input is obtained, main burner flame should be clear blue, almost transparent. (See Fig. 29)
12. Observe unit operation through 2 complete heating cycles. See sequence of operation in furnace Installation, Start-Up, and Operating Instructions.
13. Set room thermostat to desired temperature. Go to **STEP 8**.

STEP 8—CHECK LOW GAS PRESSURE SWITCH OPERATION

The newly installed low gas pressure switch is a safety device used to guard against adverse burner operating characteristics that can result from low gas supply pressure. Switch opens at not less than 6.5"w.c. and closes at no greater than 10.2"w.c..

This switch also prevents operation when the propane tank level is low which can result in gas with a high concentration of impurities, additives, and residues that have settled to the bottom of the tank. Operation under these conditions can cause harm to the heat exchanger system. This normally open switch closes when gas is supplied to gas valve under normal operating pressure. The closed switch completes control circuit. Should an interruption or reduction in gas supply occur, the gas pressure at switch drops below low gas pressure switch setting, and switch opens. Any interruption in control circuit (in which low gas pressure switch is wired) quickly closes gas valve and stops gas flow to burners.

When normal gas pressure is restored, the system must be electrically reset to reestablish normal heating operation. Before leaving installation, observe unit operation through 2 complete heating cycles. During this time, turn gas supply to gas valve off just long enough to completely extinguish burner flame, then instantly restore full gas supply. To ensure proper low gas pressure switch operation, observe that there is no gas supply to burners until after hot surface ignitor begins glowing.

STEP 9—LABEL APPLICATION (See Fig. 11A and 11B)

1. Fill in Conversion Responsibility Label (327697-205) and apply to inside of furnace as shown. Date, name, and address of organization making this conversion are required.
2. Attach Conversion Rating Plate Label # 327697-206 (Single-Stage) or #327697-207 (Two-Stage) near existing furnace rating plate.
3. Apply Gas Control Conversion Label:
   a. 'For single-stage gas valve apply label 327697-203 to gas valve. (Do not use 327697-202, which is similar)
   b. For two-stage gas valve apply label 327697-202 to gas valve. (Do not use 327697-203, which is similar)

Single Stage Models			Two-Stage Models		Variable Speed Models	
58MXA	350MAV	PG9MAA	58MTA	352MAV	58MVP	355MAV
58MCA	340MAV	490AAV				
58MSA	345MAV					

STEP 1—INSTALL MAIN BURNER ORIFICES

NOTE: See Fig. 27 or 28 for component location in upflow orientation. Reorient component arrangement when furnace is installed in other positions.

1. Turn off furnace gas and electrical supplies.
2. Remove main furnace door.
3. Turn furnace gas valve switch to OFF position.
4. Remove burner enclosure front.
5. Remove gas supply pipe from gas valve.
6. Remove wires from gas valve. Note location for reassembly.

⚠ **CAUTION: Label all wires prior to disconnection when servicing controls. Wiring errors can cause improper and dangerous operation.**

⚠ **ATTENTION: Lors des opérations d'entretien des commandes, étiqueter tous les fils avant de les déconnecter. Toute erreur de câblage peut être une source de danger et de panne.**

---

7. Remove burner-box pressure tube from gas-valve burner enclosure; reference pressure-tap fitting. (See Fig. 28)
8. Remove screws that secure manifold to burner box and remove manifold, orifices, and gas valve as 1 assembly.
9. Remove and discard orifices from manifold.
10. Refer to conversion kit rating plate #327697-201 to determine main burner orifice size. (See Fig. 25)

Furnace gas input rate on rating plate is for installations at altitudes up to 2000 ft. In the U.S.A., the input rating for altitudes above 2000 ft must be reduced by 2 percent for each 1000 ft above sea level.

In Canada, the input rating must be derated by 5 percent for altitudes of 2000 ft to 4500 ft above sea level.

The Conversion Kit Rating Plate accounts for high altitude derate.

11. Install main burner orifices. Do not use Teflon tape. Finger-tighten orifices at least 1 full turn to prevent cross threading, and then tighten with wrench. There are enough orifices in each kit for the largest furnace. Discard extra orifices.

⚠ **CAUTION: DO NOT re-drill burner orifices. Improper drilling (burrs, out-of-round holes, etc.) can cause excessive burner noise and misdirection of burner flames. This can result in flame impingement of the burners and heat exchangers, causing failure. Obtain new orifices if orifice size must be changed. (See Fig. 1)**

NOTE: DO NOT reinstall the manifold, orifices, gas-valve assembly, and burner enclosure front at this time.

STEP 2A—REPOSITION AIR SHUTTER (VARIABLE SPEED 355MAV060120 AND 58MVP120-20 ONLY)

1. Remove 2 screws holding air shutter in natural gas usage (NAT) position.
2. Reposition air shutter to propane gas usage (PROP) position. (See Fig. 18) Screws will now be located in the shutter next to the PROP stamp.

NOTE: Air opening above burners will now be partially obstructed by air shutter.

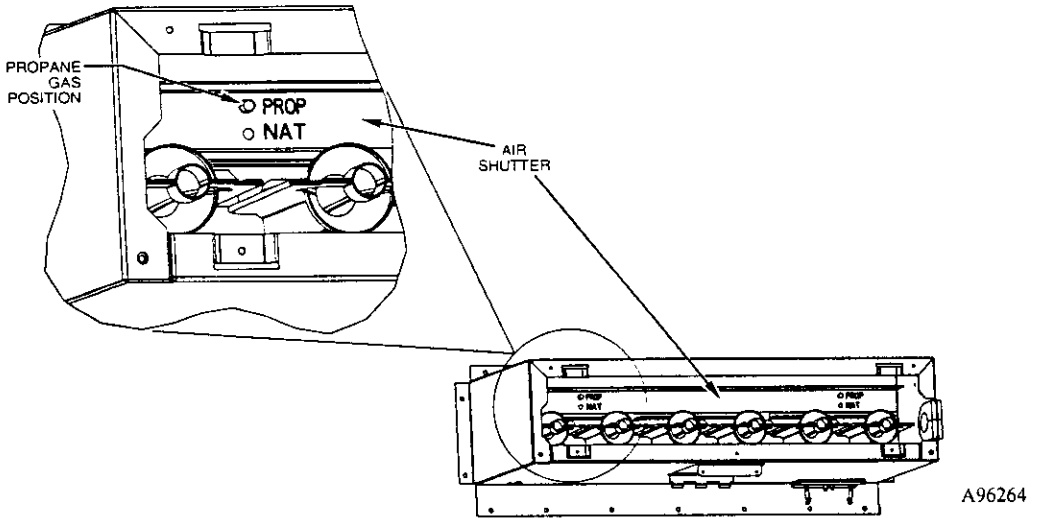

Fig. 18 – Air Shutter in Propane Gas Usage (PROP) Position (355MAV060120 and 58MVP120-20 Units Only)

STEP 2B—INSTALL DIVERTER PLATE, (Two-Stage and Variable Speed Condensing Furnaces ONLY)

1. Install diverter plate (provided in kit) above combustion air intake box as follows:
   a. Remove front 2 screws on combustion air intake box. (See Fig. 19)
   b. Remove combustion air intake box and set aside. (See Fig. 19)
   c. If air diffuser has a solid center, remove center section of air diffuser.
   d. • Remove burners.
   e. • Remove center solid portion of air diffuser. (See Fig. 20) Use tin snips to cut center portion of air diffuser. Do not overly distort air diffuser. The air diffuser is Tog-L-Locked to burner box.
   f. • Replace burners.
   g. Install diverter plate Part No. 323184-301 provided in kit. (See Fig. 21)
   h. Reinstall combustion air intake box and replace 2 screws to ensure diverter plate is properly installed. (See Fig. 19)

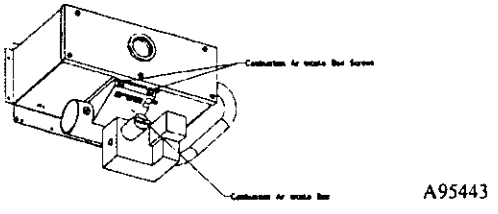

Fig. 19 – Removing Combustion Air Intake Box

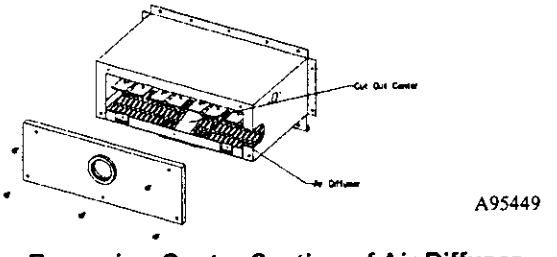

Fig. 20 – Removing Center Section of Air Diffuser

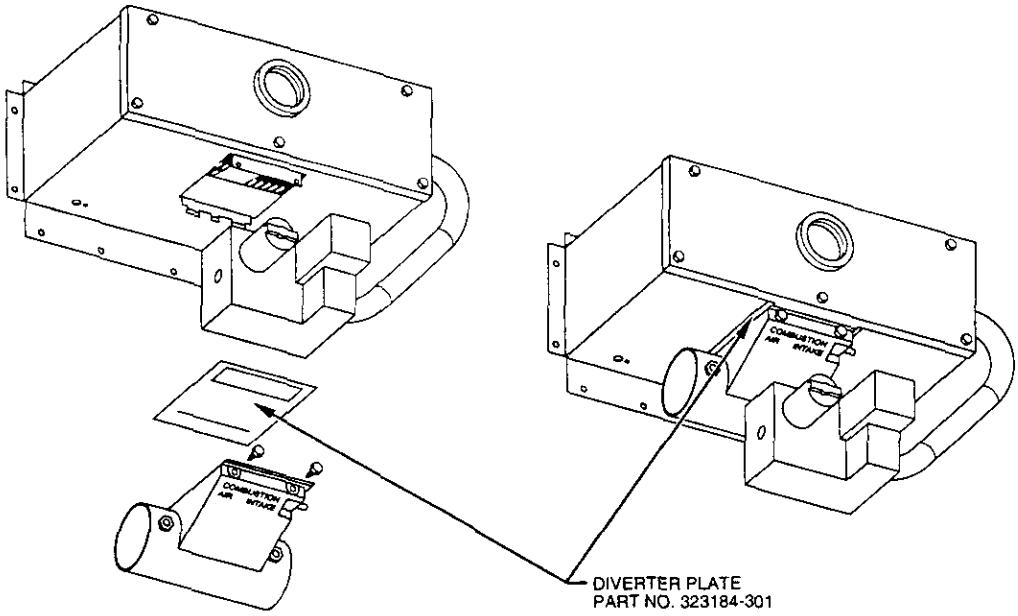

Fig. 21 – Installing Diverter Plate A95450

STEP 3—INSTALL MANIFOLD ASSEMBLY, ALL FURNACES

1. Reinstall manifold, orifice, and gas-valve assembly in burner box. Ensure manifold seal grommet is installed properly and burners fit over orifices. Verify Ignitor to Burner alignment (See Fig. 32)
2. Reconnect wires to gas valve. Refer to furnace wiring schematic for proper wire location.
3. Reinstall burner box pressure tube to gas-valve regulator fitting.
4. Apply pipe dope sparingly to end of inlet gas pipe and reconnect gas supply pipe to gas valve using backup wrench on gas valve to prevent rotation and improper orientation.

NOTE: Use propane-gas-resistant pipe dope to prevent gas leaks. DO NOT use Teflon tape.

NOTE: DO NOT reinstall burner enclosure front at this time.

STEP 4A—CONVERT AND PRE-ADJUST SINGLE STAGE GAS VALVE

NOTE: The following furnaces **MUST** have the regulator spring replaced in the gas valve:

58MCA	**340MAV**	**PG9MAA**
58MXA	**350MAV**	
58MSA	**345MAV**	

1. Be sure main gas and electrical supplies are off.
2. Remove regulator seal cap. (See Fig. 22A)
3. Remove adjustment screw and natural gas regulator spring (silver).
4. Install propane gas regulator spring (white) in gas valve.
5. Turn regulator adjustment screw in 6 turns

NOTE: DO NOT reinstall regulator seal cap at this time.

STEP 4B—PRE-ADJUST 2-STAGE AND VARIABLE SPEED GAS VALVE

NOTE: The following furnaces DO NOT need have the regulator spring replaced in the gas valve, but the valve MUST be pre-adjusted for propane applications:

58MTA	**352MAV**	**58MVP**	**355MAV**

CAUTION: The gas valve must be pre-adjusted before operating on propane gas. Failure to follow this caution could result in excess underfire and flashback. If left this way sooting and corrosion will occur leading to early heat exchanger failure.

1. Be sure gas and electrical supplies to furnace are off.
2. Remove caps that conceal adjustment screws for high-and low-heat stage gas valve regulators. (See Fig. 22B)
3. Turn **low-heat** stage adjusting screw (3/32-in. hex allen wrench) **clockwise (in) 1 full turn**. This will increase the manifold pressure closer to the propane low-heat set point.
4. Turn **high-heat** stage adjusting screw (3/32-in. hex allen wrench) **clockwise (in) 2 full turns.** This will increase the manifold pressure closer to the propane high-heat set point.
5. Replace caps that conceal gas valve regulator adjustment screws.

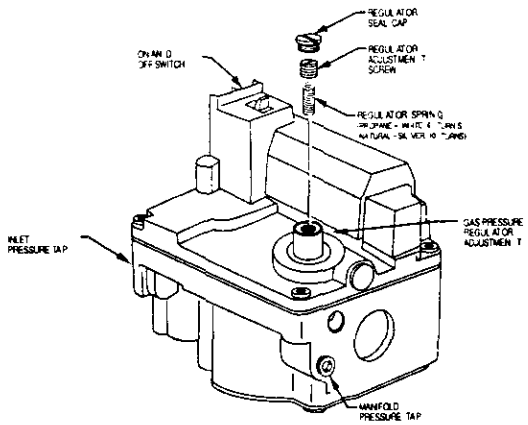

A01073

Fig. 22A – Single Stage Gas Valve

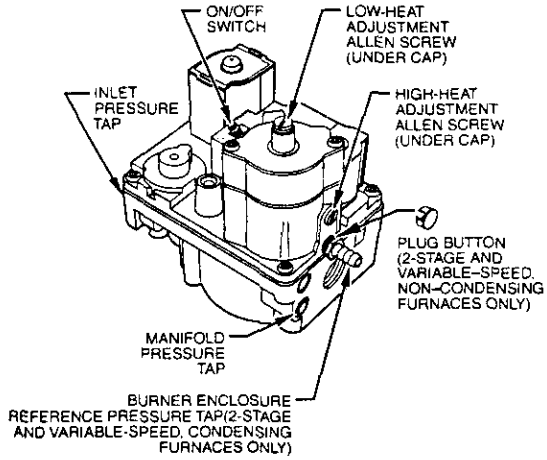

A01069

Fig. 22B – Two Stage Gas Valve

STEP 5—INSTALL LOW GAS PRESSURE SWITCH (LGPS), ALL FURNACES

NOTE: The inlet gas pipe must be disconnected from valve so pressure switch can be installed.

NOTE: Use propane-gas-resistant pipe dope on all connections to prevent gas leaks. DO NOT use Teflon tape.

1. Be sure main gas and electric supplies to furnace are off.
2. Remove 1/8-in. pipe plug from inlet pressure tap on gas valve. (See Fig. 6A) DO NOT DISCARD PLUG!
3. Apply pipe dope sparingly to the ends of the 1/8" brass male coupling (provided in kit) and install it in 1/8-in. tapped opening in gas valve inlet pressure-tap. Tighten fitting with a small wrench.
4. Attach the female end of the female x female x male brass tee (provided in kit). Tighten fitting with a small wrench so the male portion of the tee points out from the furnace.
5. Apply pipe dope sparingly to male end of bras tee. Install propane low gas pressure switch (provided in kit) on nipple. After switch has been finger tightened, use small wrench on base of pressure switch for final tightening. When pressure switch is tight, switch terminals should point as shown in Fig. 6A relative to gas valve and clear control compartment access door.
6. Connect a manometer to the open end of the tee installed in the gas valve.

STEP 6—CHECK INLET GAS PRESSURE

NOTE: This kit is to be used only when inlet gas pressure is between 11.0-in. wc and 13.6-in. wc.

1. Verify manometer is connected to inlet pressure tap on gas valve.

⚠ **CAUTION: DO NOT operate furnace more than 1 minute to check inlet gas pressure, as conversion is not complete at this time.**

---

2. Turn on furnace power supply.
3. Turn gas supply manual shutoff valve to ON position.
4. Turn furnace gas valve switch to ON position.
5. For single stage models, jumper R to W.
6. For two-stage and variable speed models, perform the following steps to force furnace control board to high-heat operation.

   For Two-Stage furnaces with HK42FZ017 board, perform the following on the control board:
   a. Turn LHT switch on furnace control to ON (See Fig. 7C)

   For Two-Stage furnaces with HK42FZ010 or HK42FZ015 boards, perform the following on the control board:
   a. Turn switch #2 on furnace control board to ON. (See Fig. 17A & 17B)

   For Variable Speed furnaces using HK42FZ012 control boards, perform the following on the control board:
   a. Turn Setup Switch SW1-2 on furnace control ON. (See Fig. 26)

   For Variable Speed furnaces (4th Qtr of 2002) using HK42FZ022 control boards, perform the following on the control board:
   a. Turn Setup Switch SW1-2 on furnace control ON. (See Fig. 7D)

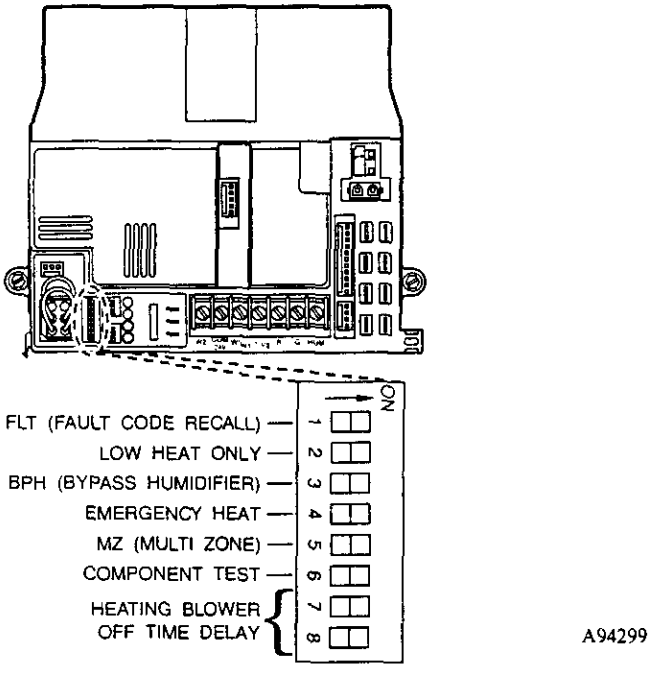

Fig. 26 – Variable Speed Condensing Furnace Control Board

7. Jumper R-W/W1 and R-W2 thermostat connections on control.
8. When main burners ignite, confirm inlet gas pressure is between 11.0-in. w.c. and 13.6-in. w.c.
9. Remove jumper across R to W or R-W/W1 and R-W2 thermostat connections to terminate call for heat.
10. Turn furnace gas valve switch to OFF position.

11. Turn gas supply manual shutoff valve to OFF position.
12. Turn off furnace power supply.
13. Remove manometer.
14. Apply pipe dope sparingly to end of inlet gas pipe plug and install in unused end of 1/8" tee. Use a small back-up wrench on tee when tightening gas inlet pipe plug. (See Fig. 6A)

STEP 7A—MODIFY SINGLE STAGE PRESSURE SWITCH WIRING (Refer to furnace wiring diagram)

1. Disconnect yellow wire from pressure switch (PRS) on furnace inducer housing. Attach wire to C terminal on low gas pressure switch (LGPS).
2. Connect insulated terminal of 16-in. yellow wire (provided in kit) to NO terminal on low gas pressure switch (LGPS). Connect other (flag style insulated) end to the C terminal on furnace pressure switch (PRS) located on inducer housing.
3. Route wires along wire harness. Secure with wire tie provided in kit. Go to Step 8.

STEP 7B—MODIFY 2-STAGE AND VARIABLE SPEED PRESSURE SWITCH WIRING (Refer to furnace wiring diagram)

1. Disconnect orange wire from low-heat pressure switch LPS on inducer housing.
2. Connect un-insulated terminal of 1 orange wire (provided in kit) to splice connector. Connect other end to C terminal on low gas pressure switch LGPS.
3. Connect insulated terminal of second orange wire (provided in kit) to NO terminal on low gas pressure switch LGPS. Connect other end to pressure switch LPS located on inducer housing.
4. Route orange wires along wire harness. If possible, secure with wire tie provided in kit. Go to Step 8.

STEP 8—CHECK FURNACE OPERATION AND MAKE NECESSARY ADJUSTMENTS

1. Be sure main gas and electric supplies to furnace are off.
2. Remove 1/8-in. pipe plug from manifold pressure tap on downstream side of gas valve.
3. Attach manometer to manifold pressure tap on gas valve. (See Fig. 24)
4. Turn gas supply manual shutoff valve to ON position.
5. Turn furnace gas valve switch to ON position.
6. Check all threaded pipe connections for gas leaks.
7. Turn on furnace power supply.

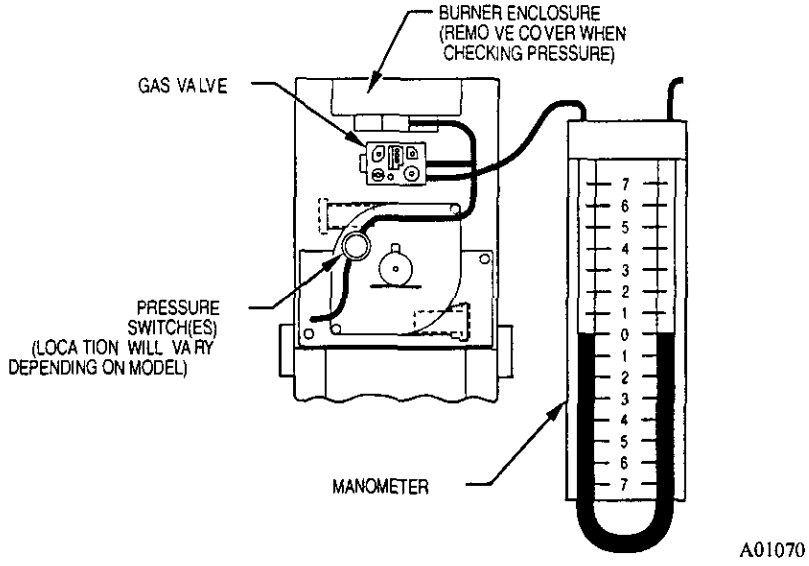

Fig. 24 – Adjusting Manifold Pressure (Manifold Attachment)

⚠ **WARNING: NEVER use matches, candles, flame, or other sources of ignition to check for gas leakage. Use a soap-and-water solution to check for gas leaks. Failure to follow this warning could result in fire, explosion, personal injury, or death.**

STEP 9—SET GAS INPUT RATE INFORMATION

The gas input rate for propane is the same as for natural gas. See furnace rating plate (See Fig. 25) for input rate. The input rate for propane is determined by manifold pressure and orifice size. The gas-valve regulator must be set for low heat first and then set for high heat on 2-Stage and Variable Speed furnaces. The gas valve regulator must also be adjusted on Single Stage furnaces

CONVERSION KIT RATING PLATE - CARRIER CORP.

THIS APPLIANCE HAS BEEN CONVERTED TO USE PROPANE GAS FOR FUEL. REFER TO KIT INSTRUCTIONS FOR CONVERSION PROCEDURES. USE PARTS SUPPLIED BY CARRIER CORPORATION AND INSTALLED BY QUALIFIED PERSONNEL. SEE EXISTING RATING PLATE FOR APPLIANCE MODEL NO AND INPUT RATING.

NOTE: Furnace gas input rate on rating plate is for installations up to 2000 ft above sea level. In U.S.A. the input rating for altitudes above 2000 ft must be derated by 2% for each 1000 ft above sea level. In Canada the input rating must be derated by 5% for altitudes of 2000 ft to 4500 ft above sea level.

KIT NO. KGANP2901ALL (SUPERSEDES KGANP2701LPS, KGANP2801F801 FUEL USED PROPANE GAS INLET PRESSURE (min - max) 11.0 - 13.6 in wc

APPLIANCE MODELS		ALTITUDE OF INSTALLATION (FT. ABOVE SEA LEVEL) U.S.A. *								
		0 to 2000	2001 * to 3000	3001 to 4000	4001 to 5000	5001 to 6000	6001 to 7000	7001 to 8000	8001 to 9000	9001 to 10000
340MAV, 345MAV, 350MAV, 490AAV, 58MCA, 58MSA, 58MXA, PG9MAA (All model sizes EXCEPT 140)	Orifice No.	55	55	55	55	1.25mm	1.25mm	1.25mm	1.25mm	1.25mm
	Mnfld Press	10.0	10.0	10.0	10.0	11.0	11.0	11.0	11.0	11.0
340MAV, 350MAV, 490AAV, 58MXA, 58MCA, PG9MAA (140 Model Size ONLY)	Orifice No.	54	54	54	54	54	54	54	54	54
	Mnfld Press	11.0	10.5	10.5	10.0	10.0	10.0	10.0	10.0	10.0
352MAV, 355MAV, 58MTA, 58MVP	Orifice No.	1.25mm	1.25mm	1.25mm	1.25mm	1.25mm	1.25mm	1.25mm	1.25mm	1.25mm
	Mnfld Press High / Low	11.0 / 5.4	11.0 / 5.1	11.0 / 5.1	11.0 / 5.1	11.0 / 5.0	11.0 / 5.0	11.0 / 5.0	11.0 / 4.9	11.0 / 4.9

* For Canadian Installations from 2000 to 4500 ft use U.S.A. column 2001 to 3000 ft. 327697-201 REV A

A02199

Fig. 25 – Conversion Kit Rating Plate

NOTE: Manifold pressure must always be measured with the burner enclosure front removed. (See Fig. 28) Furnace gas input rate on rating plate is for installations at altitudes up to 2000 ft.

In the U.S.A., the input rating for altitudes above 2000 ft must be reduced by 2 percent for each 1000 ft above sea level.

In Canada, the input rating must be derated by 5 percent for altitudes of 2000 ft to 4500 ft above sea level.

The Conversion Kit Rating Plate accounts for high altitude derate.

STEP 10A—SET GAS INPUT RATE ON SINGLE STAGE FURNACES

1. Jumper R and W thermostat connections to call for heat. (See Fig. 7A or 7B)
2. Check manifold orifices for gas leaks when main burners ignite.
3. Adjust gas manifold pressure.
   a. Remove burner box cover (See Fig. 28) and gas valve regulator seal cap that conceal adjustment screw. (See Fig. 22A)

NOTE: Manifold pressure MUST always be measured with burner box cover removed.

   b. Turn adjusting screw counterclockwise (out) to decrease manifold pressure or clockwise (in) to increase manifold pressure.

NOTE: Gas valve regulator seal cap MUST be in place when checking input rate.

   c. When correct input is obtained, main burner flame should be clear blue, almost transparent. (See Fig. 29) Be sure regulator seal cap is in place when finished.
4. Remove jumper across R and W thermostat connections to terminate call for heat.
5. Turn furnace gas valve control switch or control knob to OFF position.
6. Turn off furnace power supply.
7. Remove manometer and replace manifold pressure tap plug.

NOTE: Use propane-gas-resistant pipe dope to prevent gas leaks. DO NOT use Teflon tape.

8. Reinstall burner box cover.
9. Turn furnace gas valve control switch or control knob to ON position.
10. Turn on furnace power supply.
11. Set room thermostat to call for heat.
12. Check manifold pressure tap plug for gas leaks when main burners ignite.

13. Observe unit operation through 2 complete heating cycles. See sequence of operation in furnace Installation, Start-up and Operating Instructions.
14. Set room thermostat to desired temperature.

STEP 10B—SET GAS INPUT RATE TWO-STAGE AND VARIABLE SPEED FURNACES

Furnace control boards should have already been set up to respond to individual W1 and W2 signals (see Step 6.6). Additional information can be found in furnace installation instructions.

1. Jumper R and W/W1 thermostat connections to call for heat.
2. Check manifold orifices for gas leaks when main burners ignite.
3. Adjust gas manifold pressure.
    a. Remove caps that conceal adjustment screws for gas valve regulators. (See Fig. 22B)
    b. Adjust low-heat input rate manifold pressure for propane gas. (See kit rating plate #327697-201)
    c. Turn low-heat adjusting screw (5/64 hex allen wrench) counterclockwise (out) to decrease input rate or clockwise (in) to increase input rate.
    d. Main burner flame should be clear blue, almost transparent. (See Fig. 29)
4. Jumper R and W2 on control center thermostat connections. This keeps furnace locked in high-heat operation.
    a. Adjust high-heat input rate manifold pressure for propane gas. (See kit rating plate #327697-201)
    b. Turn high-heat adjusting screw (5/64 hex allen wrench) counterclockwise (out) to decrease input rate or clockwise (in) to increase input rate.
    c. Remove jumper across R, W1, and W2 after high-heat adjustment to terminate call for heat.
    e. Replace caps that conceal gas-valve regulator adjustment screws.
    f. Main burner flame should be clear blue, almost transparent. (See Fig. 29)
5. Turn setup switch LHT or SW-2 on control center to OFF position.
6. Turn furnace gas-valve switch to OFF position.
7. Turn off furnace power supply.
8. Remove manometer and reattach manifold pressure tap plug.
9. Reinstall burner enclosure front.
10. Turn furnace gas-valve switch to ON position.
11. Turn on furnace power supply.
12. Set room thermostat to call for heat.
13. Check pressure tap plug for gas leaks when main burners ignite.
14. Check for correct burner flame.
15. Observe unit operation through 2 complete heating cycles. See sequence of operation in furnace Installation, Start-Up, and Operating Instructions.
16. Set room thermostat to desired temperature.

STEP 11—CHECK LOW GAS PRESSURE SWITCH OPERATION

The newly installed low gas pressure switch is a safety device used to guard against adverse burner operating characteristics that can result from low gas supply pressure. Switch opens at not less than 6.5" w.c. and closes at not greater than 10.2" w.c.

This switch also prevents operation when the propane tank level is low which can result in gas with a high concentration of impurities, additives, and residues that have settled to the bottom of the tank. Operation under these conditions can cause harm to the heat exchanger system. This normally open switch closes when gas is supplied to gas valve under normal operating pressure. The closed switch completes control circuit. Should an interruption or reduction in gas supply occur, the gas pressure at switch drops below low gas pressure switch setting, and switch opens. Any interruption in control circuit (in which low gas pressure switch is wired) quickly closes gas valve and stops gas flow to burners.

When normal gas pressure is restored, the system must be electrically reset to re-establish normal heating operation.

Before leaving installation, observe unit operation through 2 complete heating cycles. During this time, turn gas supply to gas valve off just long enough to completely extinguish burner flame, then instantly restore full gas supply. To ensure proper low gas pressure switch operation, observe that there is no gas supply to burners until after hot surface ignitor begins glowing.

STEP 12—LABEL APPLICATION

NOTE: See Fig. 27 for label location.

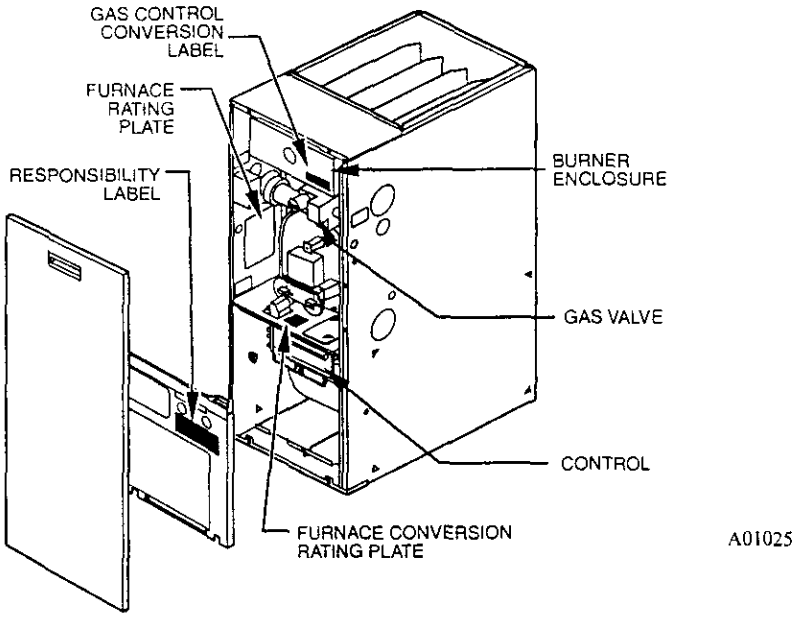

Fig. 27 – Condensing Furnace Label Location

1. Fill in Conversion Responsibility Label (327697-205) and apply to blower access panel as shown. Date, name, and address of organization making this conversion are required.
2. Attach Conversion Rating Plate Label (327697-201, See Fig. 25) on blower shelf as shown.
3. Apply Gas Conversion Label.
   a. For Single Stage Furnaces, apply label 327697-203 to burner box cover as shown. (Do not use 327697-202 which is similar)
   b. For Two Stage and Variable Speed Furnaces, apply label 327697-202 to burner box cover as shown. (Do not use 327697-203 which is similar)
4. Reinstall main furnace door.

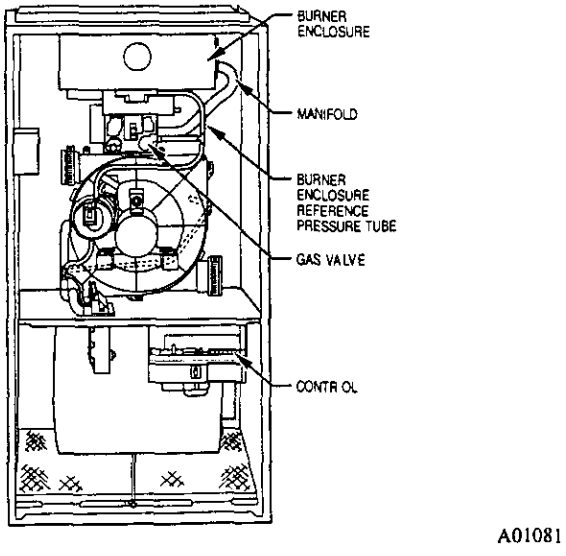

Fig. 28 – Multipoise, Hot-Surface Ignition, Fixed-Speed, Condensing Furnace Component Location (Upflow Orientation Shown)

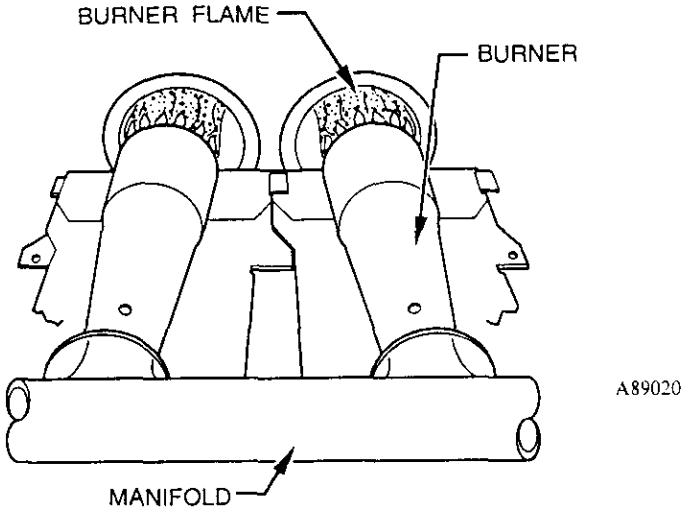

Fig. 29 – Burner Flame

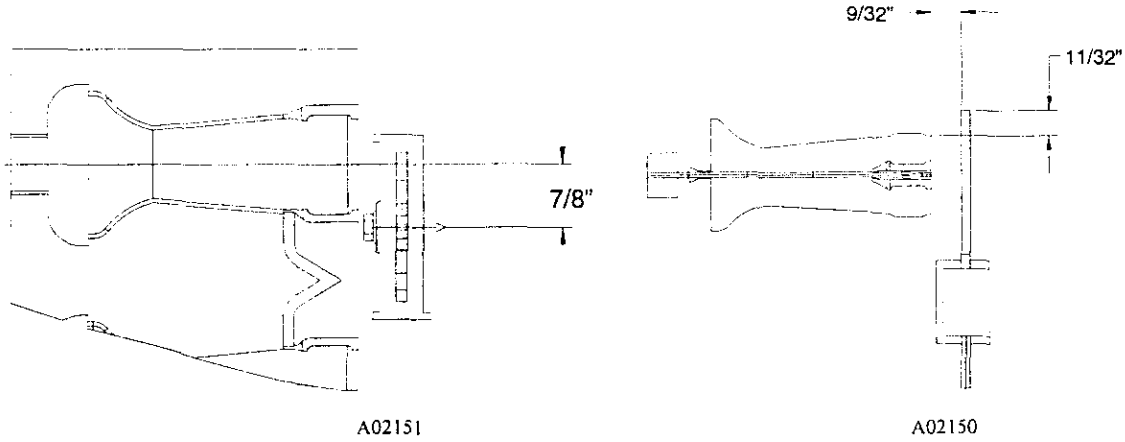

Fig. 30 – Position of Ignitor to Burner (Section 1)

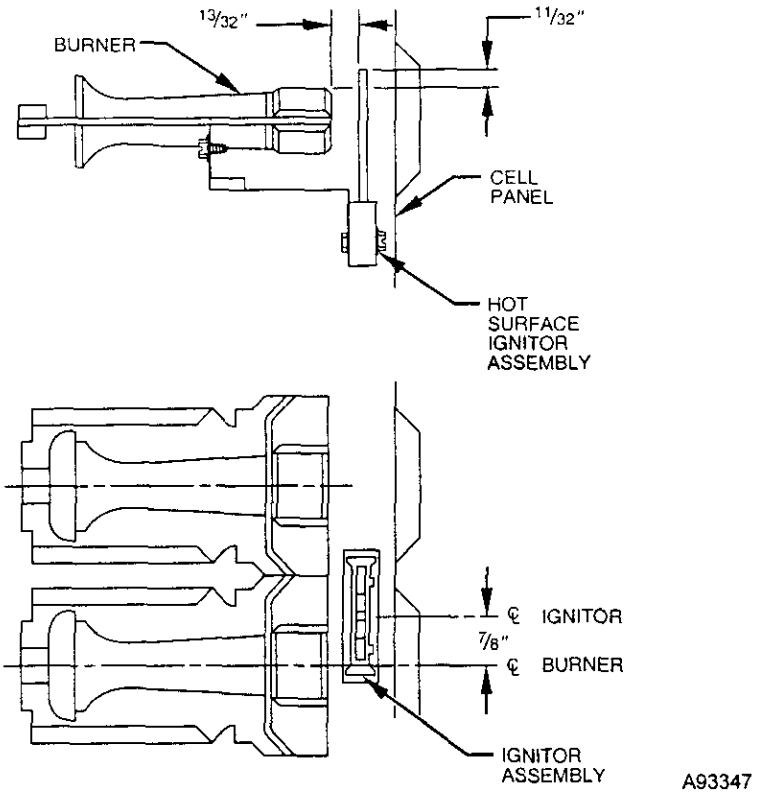

Fig. 31 – Position of Ignitor to Burner (Section 2)

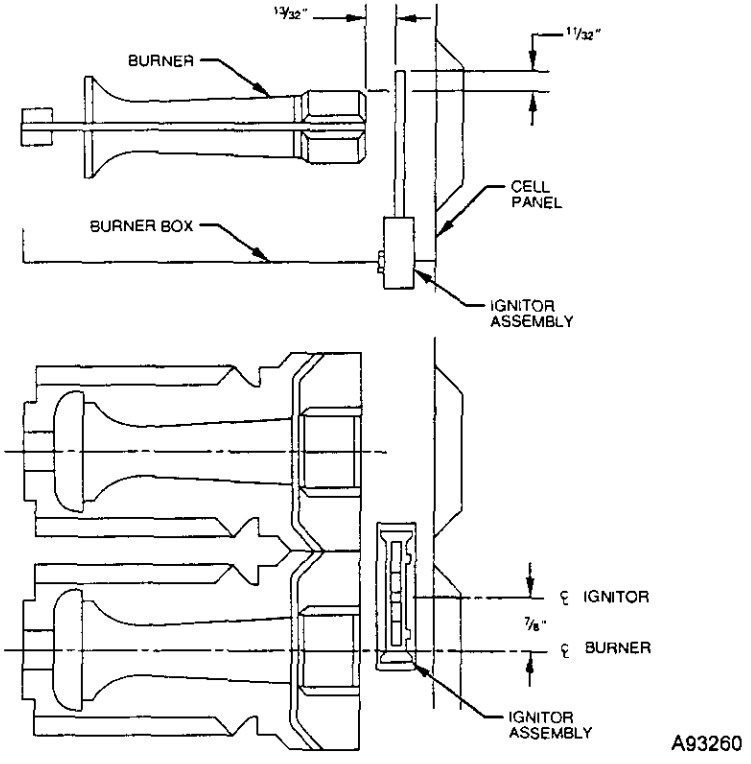

Fig. 32 – Position of Ignitor to Burner (Section 3)